R999, R999I

PEX/Al/PEX multilayer Pipes

Water Management | Radiant Systems | Energy Management

Datasheet
0168EN 06/2025

R999

Multilayer pipes R999 consist of an inner PEX-b layer (polyethylene mesh), an aluminum middle layer welded lengthwise (head-head) with laser/TIG technology and an outer white PEX-b layer. The adhesive middle layers join the aluminum and PEX-b layers homogeneously.
The aluminum layer provides a safe barrier against oxygen and other gases along with an outstanding resistance to crushing.
Multilayer pipes R999 are fit for domestic water, heating and cooling systems according to standard EN 21003.

R999 versions and product codes

Pipe rolls

PRODUCT CODE	SIZE [mm]	PACK [m]
R999Y122	16 x 2	100
R999Y123	16 x 2	200
R999Y124	16 x 2	500
R999Y132	18 x 2	100
R999Y133	18 x 2	200
R999Y142	20 x 2	100
R999Y143	20 x 2	200
R999Y173	26 x 3	50
R999Y183	32 x 3	50

5 m pipe bars

PRODUCT CODE	SIZE [mm]	PACK [m]
R999Y125	16 x 2	24 bars (120 m)
R999Y145	20 x 2	24 bars (120 m)
R999Y174	26 x 3	10 bars (50 m)
R999Y184	32 x 3	10 bars (50 m)
R999GY140	40 x 3,5	5 bars (25 m)
R999GY150	50 x 4	5 bars (25 m)
R999GY163	63 x 4,5	3 bars (15 m)
R999GY175	75 x 5	1 bar (5 m)
R999GY190	90 x 7	1 bar (5 m)

GIACOMINI
WATER E-MOTION

Giacomini S.p.A.
Via per Alzo 39, 28017 San Maurizio d'Opaglio (NO) Italia
consulenza.prodotti@giacomini.com
+39 0322 923372 - giacomini.com

R999 technical data

- Application classes (EN ISO 21003-1): 1, 2, 4, 5
- Min. working temperature: -60 °C (but always above freezing temperature of transfer fluid)
- Max. working temperature (EN ISO 21003-1): 95÷100 °C
- Max. working pressure (EN ISO 21003-1): 10 bar
- Density at 23 °C: > 0,950 g/cm³ (polyethylene mesh)
- Softening temperature: 135 °C
- Thermal expansion coefficient: 0,026 mm/m K
- Thermal conductivity: 0,42÷0,52 W/m K
- Surface roughness: 0,007 mm
- Permeability to oxygen: 0 mg/l
- Reaction to fire (EN 13501-1): C-s2,d0

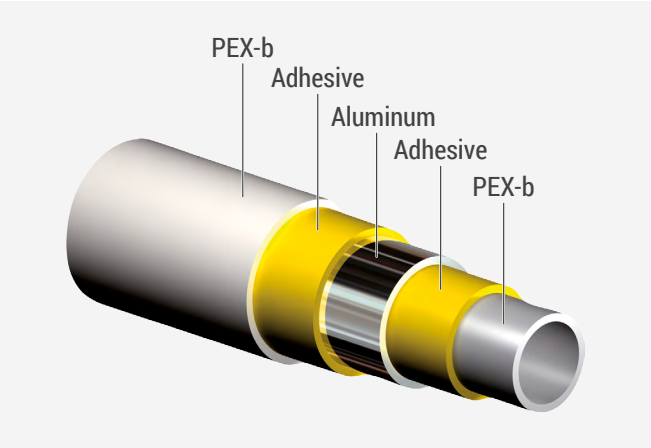

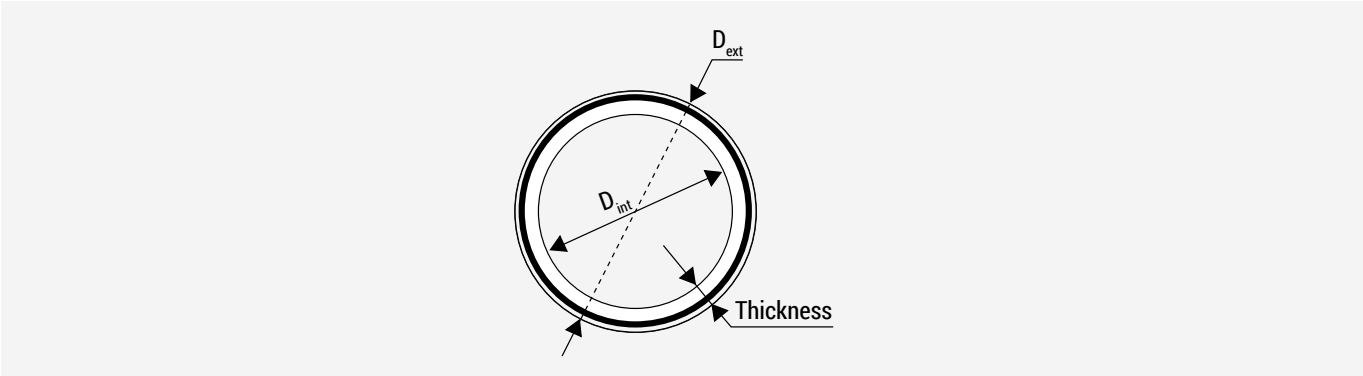

PIPE [mm]	D_{ext} [mm]	D_{int} [mm]	THICKNESS [mm]	WEIGHT [g/m]	WATER VOLUME [l/m]	BENDING MINIMUM RADIUS without pipe bender* [mm]
16x2	16	12	2	113	0,113	80
18x2	18	14	2	130	0,154	90
20x2	20	16	2	156	0,201	100
26x3	26	20	3	286	0,314	130
32x3	32	26	3	390	0,530	160
40x3,5	40	33	3,5	545	0,854	Pipe bars
50x4	50	42	4	833	1,383	Pipe bars
63x4,5	63	54	4,5	1232	2,286	Pipe bars
75x5	70	65	5	1603	3,312	Pipe bars
90x7	90	76	7	2403	4,528	Pipe bars

* Pipes can be mechanically bent with bending radius up to 2,5 times its diameter.

Giacomini S.p.A.
Via per Alzo 39, 28017 San Maurizio d'Opaglio (NO) Italia
consulenza.prodotti@giacomini.com
+39 0322 923372 - giacomini.com

R999I

Multilayer pipes with insulation coating R999I consist of an inner PEX-b layer (polyethylene mesh), an aluminum middle layer welded lengthwise (head-head) with laser/TIG technology and an outer white PEX-b layer. The adhesive middle layers join the aluminum and PEX-b layers homogeneously.
The insulation coating is made with closed-cell polyethylene foam (CFC-free), protected by a special outer film - red or blue for heating systems and light grey for cooling systems - enhances the system energy efficiency and further reduces the noise level of systems made with synthetic materials.
R999I pipe is used in heating/cooling and domestic water distribution systems where the insulation against condensation and energy loss is required, in accordance with EN ISO 12241 standard "Thermal insulation for systems in buildings and industrial installations."

R999I versions and product codes

Pipe rolls, for heating

PRODUCT CODE	SIZE [mm]	PACK [m]	INSULATION THICKNESS [mm]	INSULATION COLOR
R999IY220	16 x 2	50	6	Red
R999IY222	16 x 2	100	6	Red
R999IY225	16 x 2	50	6	Blue
R999IY227	16 x 2	100	6	Blue
R999IY230	18 x 2	50	6	Red
R999IY235	18 x 2	50	6	Blue
R999IY240	20 x 2	50	10	Red
R999IY245	20 x 2	50	10	Blue
R999IY270	26 x 3	25	10	Red
R999IY272	26 x 3	50	10	Red
R999IY275	26 x 3	50	10	Blue
R999IY280	32 x 3	25	10	Red
R999IY285	32 x 3	25	10	Blue

Pipe rolls, for heating and cooling

PRODUCT CODE	SIZE [mm]	PACK [m]	INSULATION THICKNESS [mm]	INSULATION COLOR
R999IY120	16 x 2	50	10	Grey
R999IY130	18 x 2	50	10	Grey
R999IY140	20 x 2	50	13	Grey
R999IY170	26 x 3	25	13	Grey
R999IY180	32 x 3	25	13	Grey

Giacomini S.p.A.
Via per Alzo 39, 28017 San Maurizio d'Opaglio (NO) Italia
consulenza.prodotti@giacomini.com
+39 0322 923372 - giacomini.com

R999I technical data

- Application classes (EN ISO 21003-1): 1, 2, 4, 5
- Min. working temperature: -60 °C (but always above freezing temperature of transfer fluid)
- Max. working temperature (EN ISO 21003-1): 95÷100 °C
- Max. working pressure (EN ISO 21003-1): 10 bar
- Density at 23 °C: > 0,950 g/cm³ (polyethylene mesh)
- Softening temperature: 135 °C
- Thermal expansion coefficient: 0,026 mm/m K
- Thermal conductivity: 0,04 W/m K
- Surface roughness: 0,007 mm
- Permeability to oxygen: 0 mg/l
- Resistance to water vapor diffusion: μ > 5000
- Reaction to fire:
  bare pipe (EN 13501-1): C-s2,d0
  insulation (EN 13501-1 LNE P126686): B_L-s1,d0

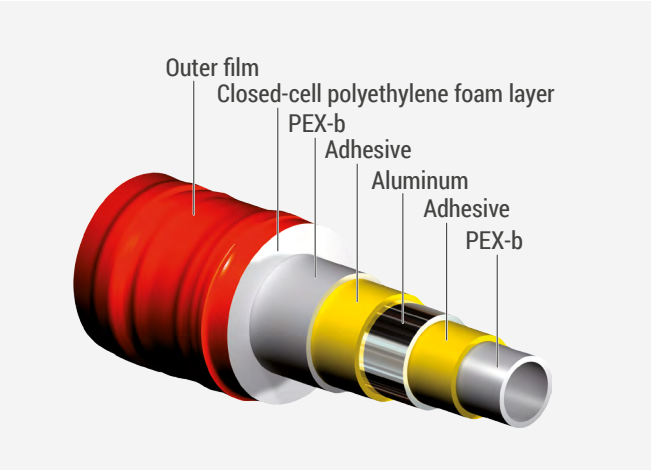

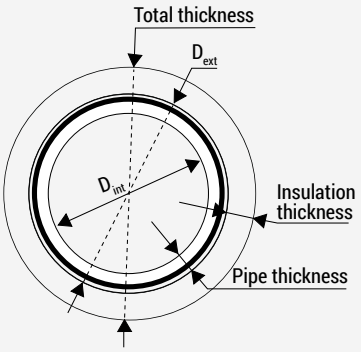

PIPE [mm]	D_{ext} [mm]	D_{int} [mm]	PIPE THICKNESS [mm]	TOTAL THICKNESS [mm]	INSULATION THICKNESS [mm]	INSULATION R [m²K/W]	WEIGHT [g/m]	WATER VOLUME [l/m]	BENDING MINIMUM RADIUS without pipe bender* [mm]
16x2	16	12	2	28	6	0,150	121	0,113	80
16x2	16	12	2	36	10	0,225	133	0,113	80
18x2	18	14	2	30	6	0,150	139	0,154	90
18x2	18	14	2	38	10	0,225	160	0,154	90
20x2	20	16	2	40	10	0,225	179	0,201	100
20x2	20	16	2	46	13	0,325	190	0,201	100
26x3	26	20	3	46	10	0,225	320	0,314	130
26x3	26	20	3	52	13	0,325	334	0,314	130
32x3	32	26	3	52	10	0,225	430	0,530	160
32x3	32	26	3	58	13	0,325	445	0,530	160

Range recommended for heating systems
Range recommended for cooling systems

* Pipes can be mechanically bent with bending radius up to 2,5 times its diameter.

Giacomini S.p.A.
Via per Alzo 39, 28017 San Maurizio d'Opaglio (NO) Italia
consulenza.prodotti@giacomini.com
+39 0322 923372 - giacomini.com

Losses of pressure

TEMPERATURE = 10 °C

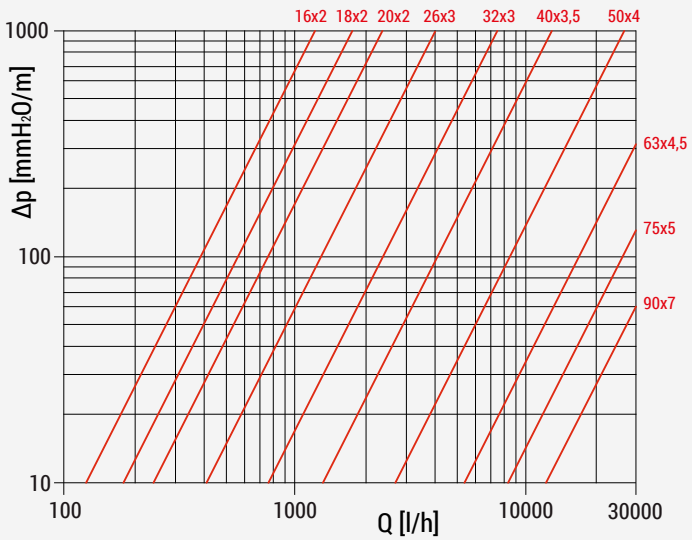

TEMPERATURE = 60 °C

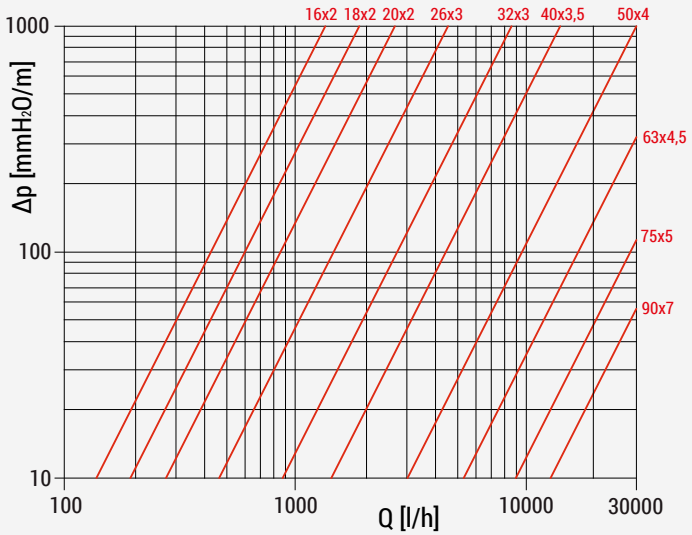

TEMPERATURE = 80 °C

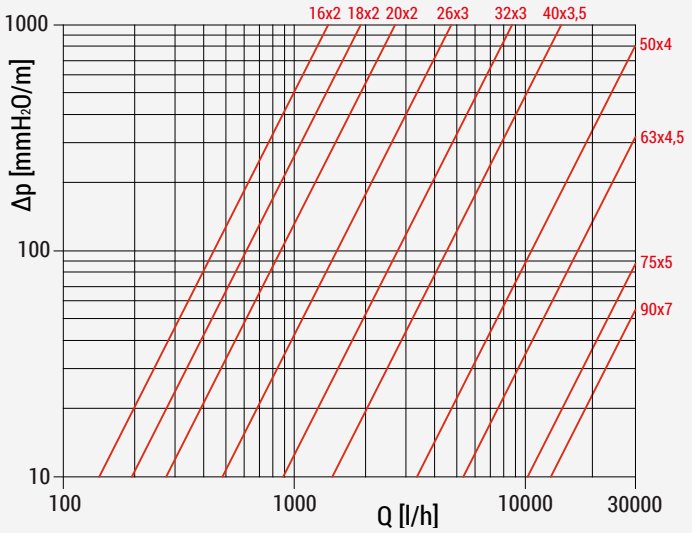

Giacomini S.p.A.
Via per Alzo 39, 28017 San Maurizio d'Opaglio (NO) Italia
consulenza.prodotti@giacomini.com
+39 0322 923372 - giacomini.com

Fittings

PEX-b/Al/PEX-b multilayer pipes can be combined to mechanical-pressure, compression or press fittings.
All fittings include a separator that insulates the pipe aluminum from the fitting to prevent galvanic corrosion.

NOTE. Given the wide range of fittings available, we recommend referring to the latest version of our catalog for sizes and product codes along with the corresponding range of application.

Thermal expansions

Always take into account thermal expansion for planning and installation of PEX-b/Al/PEX-b multilayer pipes.
Use the chart below to carry out proper evaluations.
Thermal expansion can be determined by applying the formula $\Delta L = a \times L \times \Delta t$
where:
- ΔL = expansion expressed in mm
- a = linear thermal expansion coefficient corresponding to 0,026 mm/m K
- L = pipe length expressed in m
- Δt = temperature variation expressed in Kelvin [K] or Celsius [°C] degrees

PIPE LENGTH [m]	TEMPERATURE DIFFERENCE [K]							
	10	20	30	40	50	60	70	80
1	0,26	0,52	0,78	1,04	1,3	1,56	1,82	2,08
2	0,52	1,04	1,56	2,08	2,6	3,12	3,64	4,16
3	0,78	1,56	2,34	3,12	3,9	4,68	5,46	6,24
4	1,04	2,08	3,12	4,16	5,2	6,24	7,28	8,32
5	1,3	2,6	3,9	5,2	6,5	7,8	9,1	10,4
6	1,56	3,12	4,68	6,24	7,8	9,36	10,92	12,48
7	1,82	3,64	5,46	7,28	9,1	10,92	12,74	14,56
8	2,08	4,16	6,24	8,32	10,4	12,48	14,56	16,64
9	2,34	4,68	7,02	9,36	11,7	14,04	16,38	18,72
10	2,6	5,2	7,8	10,4	13	15,6	18,2	20,8
	LINEAR EXPANSION [mm]							

Giacomini S.p.A.
Via per Alzo 39, 28017 San Maurizio d'Opaglio (NO) Italia
consulenza.prodotti@giacomini.com
+39 0322 923372 - giacomini.com

Pipe laying

During the laying process, some simple precautions must be observed with respect to pipe connection thanks to special fittings and adaptors, pipe bends, protection against UV rays and against any possible damage involving the pipe or its protective sleeve.

- The connection of pipes to distribution manifolds or elbows for tap coupling must be executed using fittings and adaptors of the right size for that specific pipe.

- Pipe laying, fixing and connections have to be realized thus to avoid permanent mechanical stress on components.

- All materials used to manufacture pipes expand when they are heated and shrink when they are cooled: for this reason longitudinal change (ΔL) generated by temperature change should always been considered during installation. (see paragraph "Thermal expansions").

- For surface installation, pipe length must be calculated on the basis of system requirements and distances between pipe supports must be carefully evaluated. Maximum distance between each support (L) depends on the diameter of the pipe used.

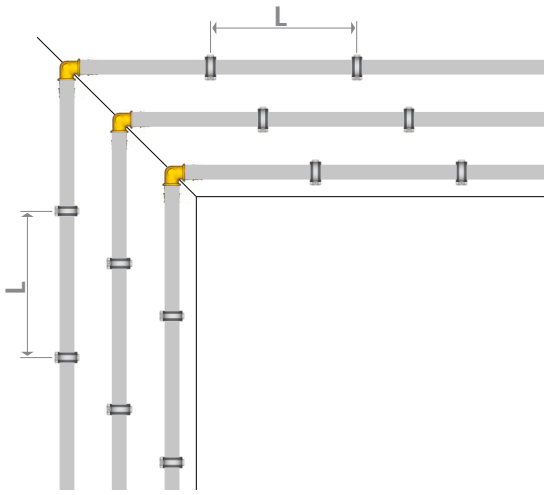

PIPE EXTERNAL Ø [mm]	MAX. DISTANCE BETWEEN SUPPORTS (L) [mm]
16	1000
18	1100
20	1250
26	1500
32	2000
40	2250
50	2500
63	2750
75	2750
90	2750

- Supports used in surface installations have the two key functions of supporting the pipe and allowing its thermal expansion. Supports can be fixed, clamping the pipe; or sliding, permitting the pipe to slide as a result of thermal expansion.

FIXED SUPPORT	SLIDING SUPPORT
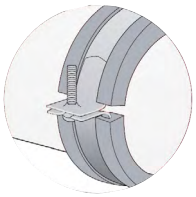	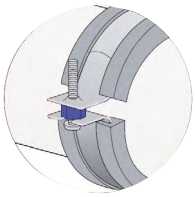

⚠ WARNING. Secure the pipe with the aid of plastic ties. Avoid using metal ties without protection, as they could damage the pipe.

Giacomini S.p.A.
Via per Alzo 39, 28017 San Maurizio d'Opaglio (NO) Italia
consulenza.prodotti@giacomini.com
+39 0322 923372 - giacomini.com

- In long straight pipe stretches, to absorb any length changes, it is advisable to insert at least one expansion bend every 10 m. For pipes with a diameter equal to or greater than 32 mm, expansion bends are mandatory.

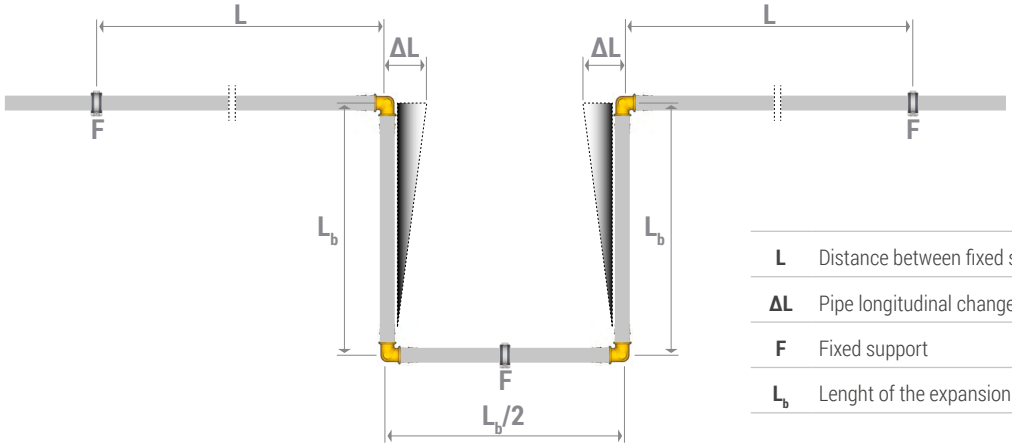

L	Distance between fixed support and expansion bend
ΔL	Pipe longitudinal change
F	Fixed support
L_b	Lenght of the expansion bend

Minimum lenght of expansion bend (L_b) can be calculated with the following formula: $\mathbf{L_b = C \times \sqrt{(Ø_e \times \Delta L)}}$

L_b = minimum lenght of the expansion bend in mm
C = costant of material (for multilayer pipe the value is 33)
$Ø_e$ = pipe external diameter in mm
ΔL = pipe longitudinal change in mm

Example:
L = 5 m
$Ø_e$ = 25 mm
α = 0,026 mm/(m K)
ΔT = 60 °C
ΔL = 5 x 0,026 x 60 = 7,8 mm
$L_b = 33 \times \sqrt{25 \times 7,8} = 460$ mm

- When bends are required, it is fundamental to use fittings and fix/sliding supports correctly, as per the following drawing, It's advisable to fit an expansion bend each time the pipe changes direction also considering to have clearence around.

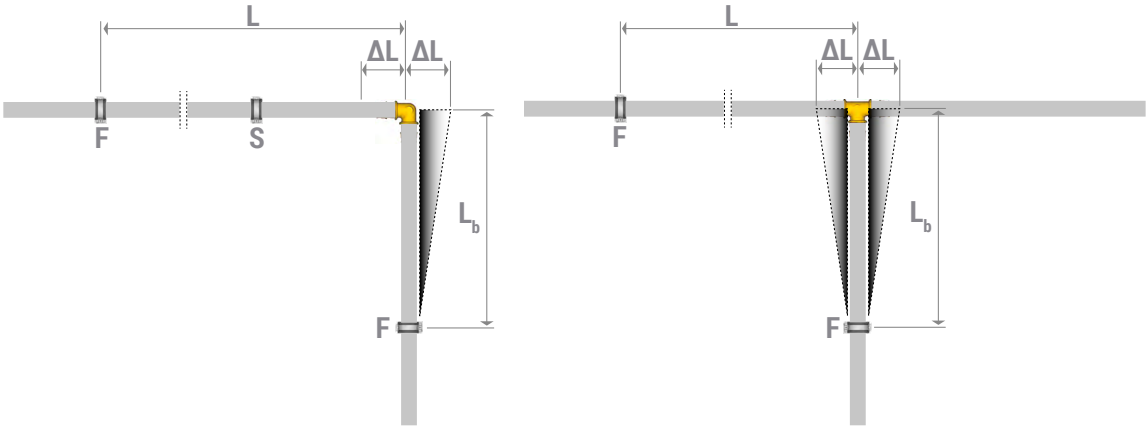

L	Distance between fixed support and expansion bend
ΔL	Pipe longitudinal change
F	Fixed support
S	Sliding support
L_b	Lenght of the expansion bend

Giacomini S.p.A.
Via per Alzo 39, 28017 San Maurizio d'Opaglio (NO) Italia
consulenza.prodotti@giacomini.com
+39 0322 923372 - giacomini.com

Precautions

PEX-b/Al/PEX-b multilayer pipes call for a variety of precautions to guarantee their duration in time and functionality:

- keep the pipe in its package and store in dry roofed areas to prevent damages caused by humidity;
- do not expose to direct sunlight;
- always cut the pipe to be installed using the special tools that provide a clean cut, 90 degrees to the pipe axis and free of burrs;
- after each cut, and before assembling the fitting, carry out the calibration using the special tool and lubricate the seals on the hose connection;
- prevent ice build ups inside the pipe as expansions caused by a change of conditions may damage it irreversibly;
- do not store the pipe at temperatures below -30 °C;
- never expose the pipe to open flames;
- after installation, carry out a pressure test at a pressure 1.5 times the working pressure;
- the bending radius during the laying of the pipes must be greater than 5 times the external diameter of the pipe;
- pipes were fittings have already been assembled must not be bent. If bending cannot be avoided for technical reasons, the area of the pipe near the fitting must not be subjected to permanent stresses;
- two consecutive fittings must be installed at such a distance so as not to generate reciprocal stresses on all components, both during system installation and operation;
- in installations pipe must always be protected from UV rays and fluorescent lights that could alter its chemical-physical properties;
- make sure the pipe is not exposed to solar radiation or fluorescent lights for long periods;
- if the pipe is chased without a protective sleeve, it has to be covered with at least 15 mm thick screed to prevent cracking of the plaster due to thermal expansion;
- avoid chasing fittings as much as possible. If this is not possible, make sure the fitting can be inspected or protect it from contact with building material and make a note of its position in the project documentation;
- after installing the pipes and before covering them, it is advisable to test the system under pressure, so as to immediately identify any leaks (see paragraph "Pressure test");
- following the pressure test, the sleeves must be protected by encasing them with cement so that the pipes cannot be crushed or moved.

Warranty

The warranty shall be void when:

1) the working conditions vary from those provided for;
2) the pipe is used to transfer fluids not compatible with the construction material;
3) the installation instructions are not fully complied with;
4) the pipe shows visible defects caused by accidental factors upon installation or when the system is pressurized;
5) the pipe is installed using components not produced by Giacomini or different from the ones allowed.

Giacomini S.p.A.
Via per Alzo 39, 28017 San Maurizio d'Opaglio (NO) Italia
consulenza.prodotti@giacomini.com
+39 0322 923372 - giacomini.com

Classification of working conditions (EN ISO 21003-1)

The performance specifications for pipe-based systems complying with EN ISO 21003-1 refer to a project with a 50-year operational life.

RANGE OF APPLICATION	WORKING TEMPERATURE T_D [°C]	DURATION OF T_D [years]	MAX WORKING TEMPERATURE T_{MAX} [°C]	DURATION OF T_{MAX} [years]	FAILURE TEMPERATURE T_{FAIL} [°C]	DURATION OF T_{FAIL} [h]
CLASS 1 Domestic hot water (60 °C)	60	49	80	1	95	100
CLASS 2 Domestic hot water (70 °C)	70	49	80	1	95	100
CLASS 4 Floor heating and low-temperature systems	20 + 40 + 60	2,5 + 20 + 25	70	2,5	100	100
CLASS 5 Radiator heating and high-temperature systems	20 + 60 + 80	14 + 25 + 10	90	1	100	100

- Working temperature (T_D): working temperature provided for the range of application, expressed in °C.
- Max. working temperature (T_{MAX}): the working temperature highest value, allowed only for a short time.
- Failure temperature (T_{FAIL}): the highest temperature possible when control systems fail (the time allowed for this value is 100 h over 50 years of uninterrupted operation).

Product specifications

R999
PEX-b/AL/PEX-b metal multi-layer pipe. Color of outer layer: white. PEX-b (polyethylene mesh) inner layer, aluminum middle layer welded lengthwise (head-head) with laser/TIG technology, PEX-b (polyethylene mesh) outer layer. The adhesive middle layers join the aluminum and PEX layers homogeneously. The aluminum layer provides a safe barrier against oxygen and other gases along with an outstanding resistance to crushing. Application classes (EN ISO 21003-1) 1, 2, 4, 5 (fit for transfer of drinking water). Min. working temperature: -60 °C (but always above freezing temperature of transfer fluid). Max. working temperature (EN ISO 21003-1): 95÷100 °C. Max. working pressure (EN ISO 21003-1): 10 bar. Thermal conductivity: 0,42÷0,52 W/m K. Reaction to fire (EN 13501-1): C-s2,d0. Provided in rolls or 5 m bars.

R999I
Metal multi-layer PEX-b/AL/PEX-b pipe with thermal insulation. PEX-b (polyethylene mesh) inner layer, aluminum middle layer welded lengthwise (head-head) with laser/TIG technology, PEX-b (polyethylene mesh) outer layer. The adhesive middle layers join the aluminum and PEX layers homogeneously. The aluminum layer provides a safe barrier against oxygen and other gases along with an outstanding resistance to crushing. The insulation layer is protected by a special outer film - red or blue for the heating pipe and light grey for the heating and cooling pipe, in accordance with EN ISO 12241 standard. Application classes (EN ISO 21003-1) 1, 2, 4, 5 (fit for transfer of drinking water). Min. working temperature: -60 °C (but always above freezing temperature of transfer fluid). Max. working temperature (EN ISO 21003-1): 95÷100 °C. Max. working pressure (EN ISO 21003-1): 10 bar. Thermal conductivity: 0,04 W/m K. Reaction to fire (EN 13501-1): bare pipe (EN 13501-1):C-s2,d0; insulation (EN 13501-1 LNE P126686): B_L-s1,d0. Provided in rolls.

Safety Warning. Installation, commissioning and periodical maintenance of the product must be carried out by qualified operators in compliance with national regulations and/or local standards. A qualified installer must take all required measures, including use of Individual Protection Devices, for his and others' safety. An improper installation may damage people, animals or objects towards which Giacomini S.p.A. may not be held liable.

Package Disposal. Carton boxes: paper recycling. Plastic bags and bubble wrap: plastic recycling.

Additional information. For more information, go to giacomini.com or contact our technical assistance service. This document provides only general indications. Giacomini S.p.A. may change at any time, without notice and for technical or commercial reasons, the items included herewith. The information included in this technical sheet do not exempt the user from strictly complying with the rules and good practice standards in force.

Product Disposal. Do not dispose of product as municipal waste at the end of its life cycle. Dispose of product at a special recycling platform managed by local authorities or at retailers providing this type of service.

Giacomini S.p.A.
Via per Alzo 39, 28017 San Maurizio d'Opaglio (NO) Italia
consulenza.prodotti@giacomini.com
+39 0322 923372 - giacomini.com