R88E, R88EI

Radiant Systems

Energy Management

Datasheet
1111EN 07/2026

Compact automatic air vent with integrated filter and horizontal vent

R88E
WITHOUT
SHUT-OFF VALVE

R88E
WITH INTEGRATED
SHUT-OFF VALVE

R88EI
WITH SEPARATE
SHUT-OFF VALVE

PATENTED

The R88E/R88EI compact automatic air vent performs the function of venting air formed in the hydraulic circuits of HVAC systems. It prevents the phenomena that may affect the duration and efficiency of the thermal system.
The air vent effectively vents the system on a periodical basis during normal operation.
The air vent consists of a fluid shut-off valve, an inspectionable filter, an adjustable horizontal vent and a cap with hygroscopic gaskets.

Versions and product codes

SERIES	PRODUCT CODE	CONNECTIONS	MAIN CHARACTERISTICS
R88E	R88EY011	G 1/4"M	• Integrated inspectionable filter • Adjustable horizontal vent • Cap with hygroscopic gaskets
	R88EY002	G 3/8"M	• Integrated shut-off valve • Integrated inspectionable filter • Adjustable horizontal vent • Cap with hygroscopic gaskets
	R88EY003	G 1/2"M	
R88EI	R88EIY002	G 3/8"M	• Shut-off valve separate from the body • Integrated inspectionable filter • Adjustable horizontal vent • Cap with hygroscopic gaskets
	R88EIY003	R 1/2"	

Spare parts
- R160: separate shut-off valve, spare part for R88EI
- P88EY001: includes a body cap with an O-ring, a filter, and a locking fork
- P88EY002: includes three air vent cap with hygroscopic gaskets, three filters, three O-rings, and three locking forks

P88EY001

P88EY002

GIACOMINI
WATER E-MOTION

Giacomini S.p.A.
Via per Alzo 39, 28017 San Maurizio d'Opaglio (NO) Italy
consulenza.prodotti@giacomini.com
+39 0322 923372 - giacomini.com

Technical data

Performance
- Fluids of use: water with glycol for HVAC systems
- Max. glycol percentage: 50%
- Temperature range: 5÷110 °C
- Max working pressure: 16 bar
- Air venting max working pressure: 7 bar
- Integrated filter: filtering capacity 500 µm
- Venting air flow rate:

Materials
- Body: UNI EN 12165 CW617N brass
- Body cap, air vent cap and fork: glass-fiber reinforced PA66
- O-Ring: EPDM
- Springs and filter: stainless steel
- Float: PP-H

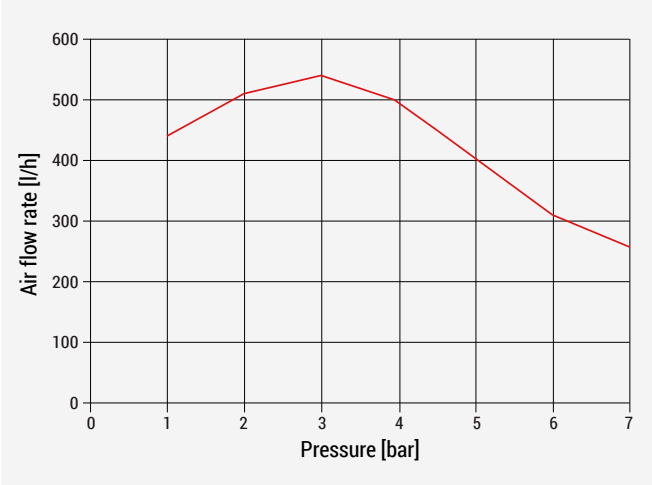

PRESSURE [bar]	AIR FLOW RATE [l/h]
1	440
2	510
3	540
4	500
5	400
6	310
7	250

NOTE. The diagram shows the maximum venting air flow rate as the relative pressure of the system changes.

Components

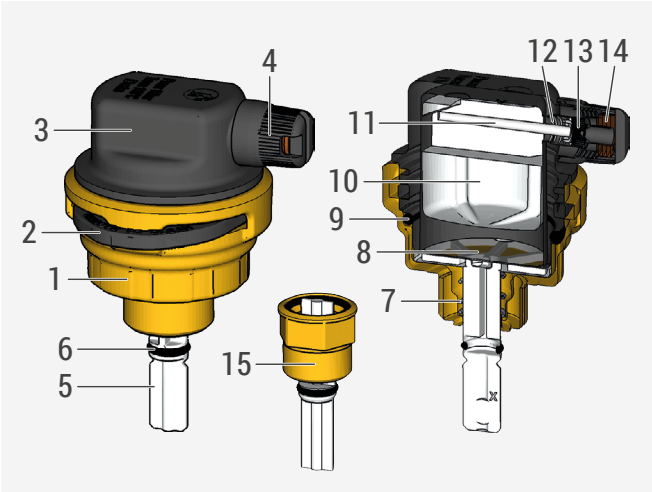

* Only for R88E with integrated shut-off valve.
** Only for R88EI

1	Air vent body
2	Locking fork
3	Body cap
4	Air vent cap
5	Paddle with shut-off valve *
6	O-Ring *
7	Spring *
8	Inspectionable filter
9	O-Ring
10	Float
11	Stem
12	Spring
13	Washer and gasket
14	Hygroscopic gaskets
15	Separate shut-off valve (R160) **

Giacomini S.p.A.
Via per Alzo 39, 28017 San Maurizio d'Opaglio (NO) Italy
consulenza.prodotti@giacomini.com
+39 0322 923372 - giacomini.com

Installation

R88E/R88EI automatic air vent can be installed in the highest point on any distribution manifold, pipes where air pockets may form, on wall-mount or base-mount boilers, near fan coils or heat exchangers.
The automatic air vents must be installed vertically with the body cap facing up and in points easy to access.

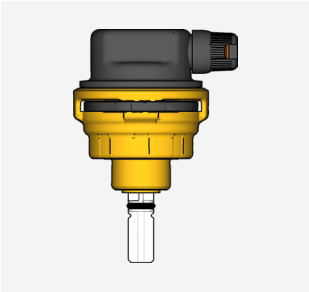
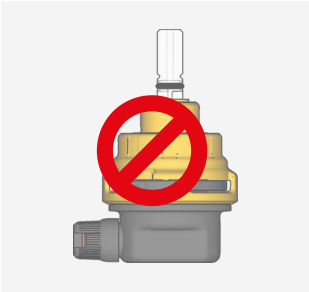
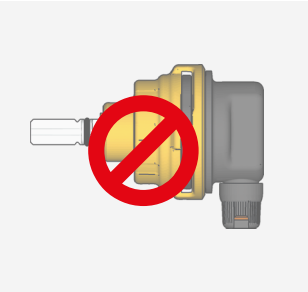
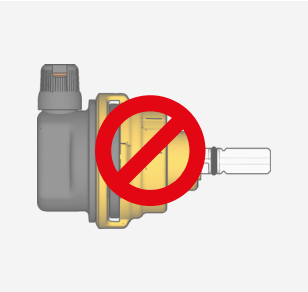

NOTE. Product codes with shut-off valve includes a paddle that extends 25 mm from the body valve. If needed, cut the exceeding part with a shear.

Adjustable horizontal vent

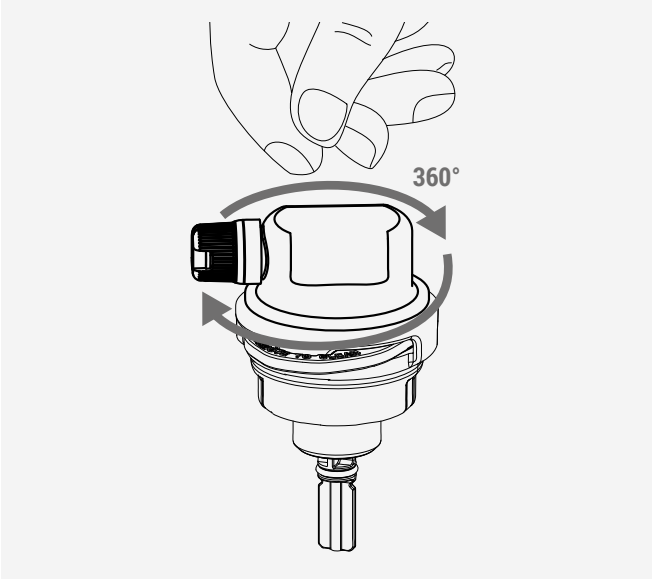

Manually turn the body cap (Components - Ref.3) to adjust the horizontal vent according to installation needs.

Giacomini S.p.A.
Via per Alzo 39, 28017 San Maurizio d'Opaglio (NO) Italy
consulenza.prodotti@giacomini.com
+39 0322 923372 - giacomini.com

Operation

During normal operation, when there is no air in the body, the internal float is raised and a mechanical function keeps the vent stopper closed.
When the float lowers for the air trapped inside the body, the stopper will open to vent it completely.
Should there be a large quantity of air in the system, the float will lower completely to vent the air more rapidly.
The air vent can be blocked manually by tightening the air vent cap all the way through (Components - Ref.4).
Under normal working conditions, the air vent cap should be left open half a turn.

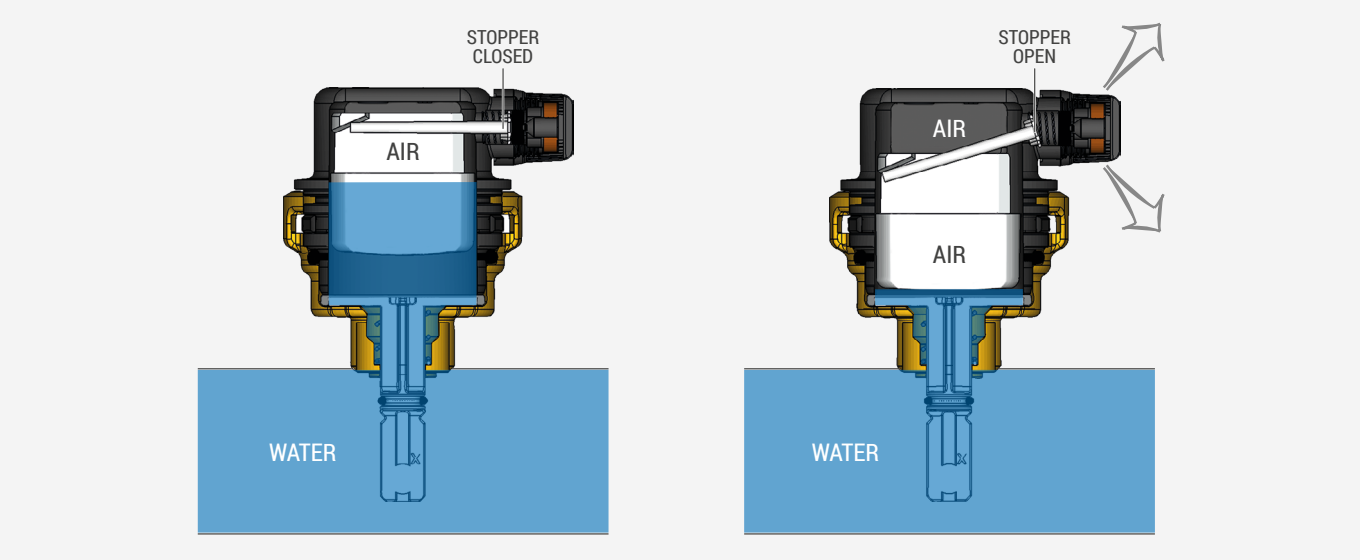

Air vent cap with hygroscopic gaskets (Components - Ref.4)
The air vent cap contains hygroscopic gaskets (Components - Ref.14).
In case of system malfunction resulting in a leak, the volume of the gaskets will increase when they touch the water, closing the vent and preventing water leaks.

Shut-off valve (Components - Ref.5)
The threaded fitting contains a stopper with spring (Components - Ref.7) which is pushed down by the body cap (Components - Ref.3): in this situation the valve inlet is open.
The body cap (Components - Ref.3) can be removed during maintenance: the spring will close the valve inlet, hence shutting off the fluid.

NOTE. For maintenance operations, refer to "Cleaning and maintenance" paragraph.

WARNING. During normal operation of the system, to ensure the correct operation of the hygroscopic gaskets, it's recommended to fully close the air vent cap, then open it half a turn.

VIDEO
Frame the QR code with your smartphone or tablet to view the video tutorial.

Giacomini S.p.A.
Via per Alzo 39, 28017 San Maurizio d'Opaglio (NO) Italy
consulenza.prodotti@giacomini.com
+39 0322 923372 - giacomini.com

Cleaning and maintenance

Cleaning the filter

Impurities may collect on the filter inside the air vent body during normal operation.
Filter cleaning can be carried out without emptying or turning off the system.
Follow the steps below to clean the filter and remove the debris:

1) reduce the system pressure. ⚠ **WARNING.** To avoid the risk of burns in the event of a hot water leak during maintenance, it is recommended to isolate the portion of the system where the air vent valve is located.
2) remove the locking fork by pushing the cap gently down;
3) remove the body cap from the air vent body - once removed, the shut-off valve inside the threaded fitting will close to prevent water leaks;
4) remove the filter from its seat using a small screwdriver - the filter has four small grooves to remove it;
5) rinse the filter with running water;
6) replace the clean filter in its seat;
7) replace the body cap and, if necessary, lubricate the EPDM O-Ring (Components - Ref.9) with an adequate lubricant;
8) fit the fork in the proper seat to lock the cap - once locked, the shut-off valve will reopen to let the water flow in.
Normal operation of the system can now resume.

⚠ **WARNING FOR CODES WITHOUT SHUT-OFF VALVE.** Before servicing codes without shut-off valve, the air vent must be intercepted and removed from the point in the system where it is installed.

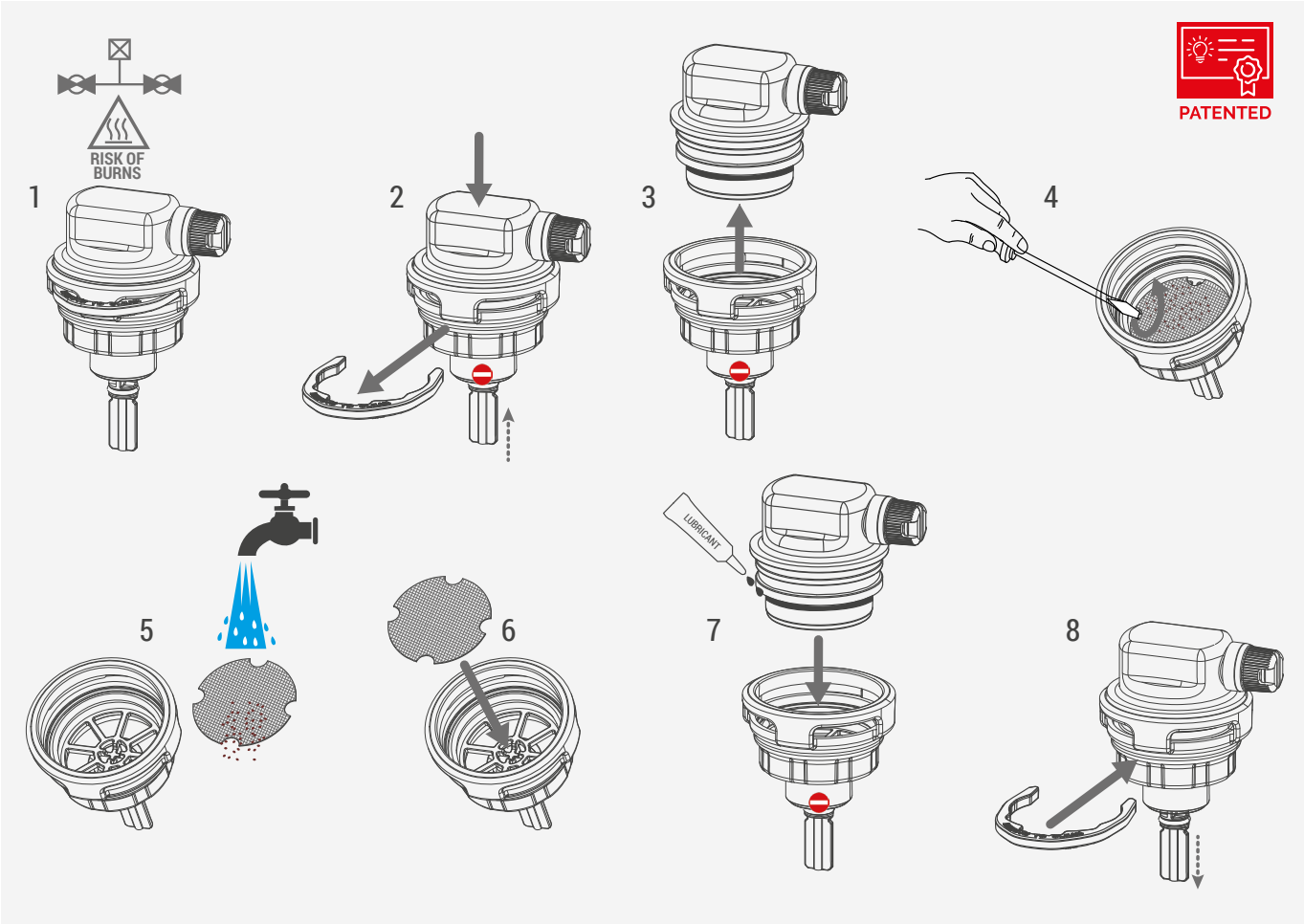

Giacomini S.p.A.
Via per Alzo 39, 28017 San Maurizio d'Opaglio (NO) Italy
consulenza.prodotti@giacomini.com
+39 0322 923372 - giacomini.com

Dimensions

R88E

With shut-off valve

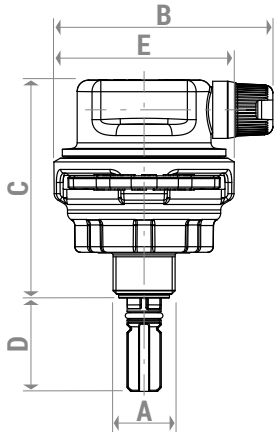

Without shut-off valve

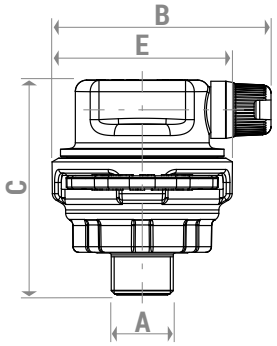

PRODUCT CODE	A [inch.]	B [mm]	C [mm]	D [mm]	E [mm]
R88EY011	G 1/4"M	59	57	n.d.	48
R88EY002	G 3/8"M	59	57	25	48
R88EY003	G 1/2"M	59	57	25	48

R88EI

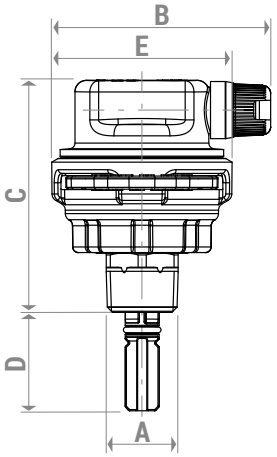

PRODUCT CODE	A [inch.]	B [mm]	C [mm]	D [mm]	E [mm]
R88EIY002	G 3/8"M	59	64	25	48
R88EIY003	R 1/2"	59	64	25	48

Product specifications

R88E

Compact automatic air vent with adjustable horizontal vent and hygroscopic gaskets, for HVAC systems. Available with G 1/4"M connection without integrated shut-off valve or with G 3/8"M, G 1/2"M connections with integrated shut-off valve. Inspectionable filter with 500 µm filtering capacity included. Body: UNI EN 12165 CW617N brass. Body cap, air vent cap and fork: glass-fiber reinforced PA66. O-Ring: EPDM. Spring and filter: stainless steel. Float: PP-H. Fluids: water, glycol-based solutions (max 50%). Temperature range: 5÷110 °C. Max working pressure: 16 bar. Air venting max working pressure 7 bar.

R88EI

Compact automatic air vent with adjustable horizontal vent and hygroscopic gaskets, for HVAC systems. Available with G 3/8"M, R 1/2" connections with shut-off valve separate from the body. Inspectionable filter with 500 µm filtering capacity included. Body: UNI EN 12165 CW617N brass. Body cap, air vent cap and fork: glass-fiber reinforced PA66. O-Ring: EPDM. Spring and filter: stainless steel. Float: PP-H. Fluids: water, glycol-based solutions (max 50%). Temperature range: 5÷110 °C. Max working pressure: 16 bar. Air venting max working pressure 7 bar.

NOTE. EUROPEAN DIRECTIVE 2014/68/UE.

The product illustrated in this technical specification satisfies the requirements of Directive 2014/68/UE and is exempt from CE marking, according to Article 4.3.

Safety Warning. Installation, commissioning and periodical maintenance of the product must be carried out by qualified operators in compliance with national regulations and/or local standards. A qualified installer must take all required measures, including use of Individual Protection Devices, for his and others' safety. An improper installation may damage people, animals or objects towards which Giacomini S.p.A. may not be held liable.

Package Disposal. Carton boxes: paper recycling. Plastic bags and bubble wrap: plastic recycling.

Additional information. For more information, go to giacomini.com or contact our technical assistance service. This document provides only general indications. Giacomini S.p.A. may change at any time, without notice and for technical or commercial reasons, the items included herewith. The information included in this technical sheet do not exempt the user from strictly complying with the rules and good practice standards in force.

Product Disposal. Do not dispose of product as municipal waste at the end of its life cycle. Dispose of product at a special recycling platform managed by local authorities or at retailers providing this type of service.

Giacomini S.p.A.
Via per Alzo 39, 28017 San Maurizio d'Opaglio (NO) Italy
consulenza.prodotti@giacomini.com
+39 0322 923372 - giacomini.com