R580CS, R585CS

Water Management

Datasheet
1211EN 07/2026

Modular manifolds in nickel-plated brass, for domestic water, outlets 3/4"E

R580CS

R585CS

Modular manifolds in nickel-plated brass for domestic water, with or without shut-off cocks.
Connection threads perfectly phased for state-of-the-art alignment of the manifolds, and O-Ring seal.
The manifolds include handwheels with plates for identification of the various usage points.
Optionally, end caps, ball valves and cabinet can be ordered to complete the manifolds.

Versions and product codes

R580CS - simple

PRODUCT CODE	CONNECTIONS MANIFOLD x OUTLETS	N. OF OUTLETS
R580CSX022	G 3/4" x 3/4"E	2
R580CSX023		3
R580CSX024		4
R580CSX042	G 1" x 3/4"E	2
R580CSX043		3
R580CSX044		4

R585CS - with shut-off cocks

PRODUCT CODE	CONNECTIONS MANIFOLD x OUTLETS	N. OF OUTLETS
R585CSX022	G 3/4" x 3/4"E	2
R585CSX023		3
R585CSX024		4
R585CSX042	G 1" x 3/4"E	2
R585CSX043		3
R585CSX044		4

Completion codes

- **R595-1**: plastic cabinet with lid, depth 90 mm
- **R598K**: pair of plastic supports for R595-1 cabinets
- **R588CS**: steel bracket with single plastic support for wall-mounted manifold installation
- **R588CSK**: steel bracket with double plastic support for wall-mounted manifold installation
- **R592DCS**: end plug in chrome-plated brass, male thread
- **R594CS**: end cap in chrome-plated brass, female thread
- **R179E**: 3/4"E adaptors for plastic or multilayer pipes
- **R178E**: 3/4"E adaptors for copper pipes
- **RM179E**: multi-jaw straight press fitting for plastic or multilayer pipes with 3/4"E nut
- Shut-off ball valves

GIACOMINI WATER E-MOTION

Giacomini S.p.A.
Via per Alzo 39, 28017 San Maurizio d'Opaglio (NO) Italia
consulenza.prodotti@giacomini.com
+39 0322 923111 - giacomini.com

Choosing the R595-1 cabinet

R595-1 CABINET PRODUCT CODE	CABINET WIDTH [mm]	MAX. NUMBER OF OUTLETS FOR R580CS/R585CS MANIFOLDS*	
		3/4" CONNECTIONS	1" CONNECTIONS
R595AY002	370	6	5
R595BY002	520	9	9
R595CY002	670	12	12

* The cabinet was selected considering the overall dimensions of the R859 shut-off ball valves and the R592DCS/R594CS end caps.

Technical data

Characteristics

- Fluids of use: domestic water, water with glycol for HVAC systems
- Max. glycol percentage: 30%
- Temperature range: 5÷110 °C
- Max working pressure: 10 bar
- Outlets center distance: 40 mm
- Shut-off cocks with manual handwheel and colored plates (R585CS)

Materials

- Manifold body: EN 12165 CW617N nickel-plated brass
- Seal O-Ring: EPDM
- Stopper: EN 12164 CW614N brass (R585CS)
- Handwheel: ABS (R585CS)
- Handwheel plates: aluminum (R585CS)

Loss of pressure

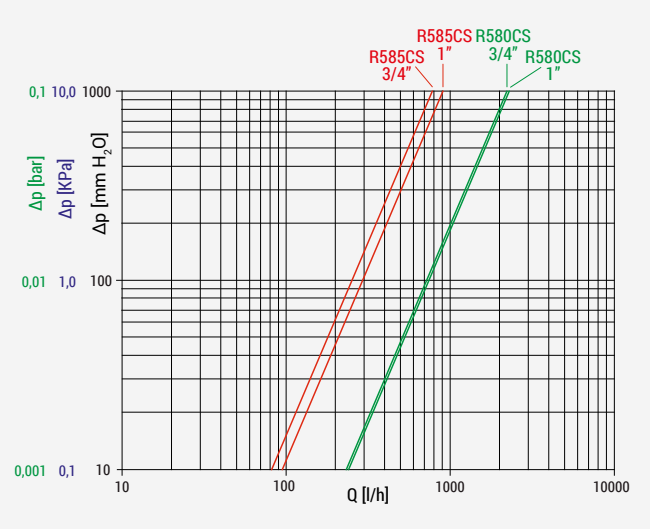

PRODUCT CODE	SIZE	Kv
R580CS	3/4"	7,26
	1"	7,41
R585CS	3/4"	2,54
	1"	2,95

Giacomini S.p.A.
Via per Alzo 39, 28017 San Maurizio d'Opaglio (NO) Italia
consulenza.prodotti@giacomini.com
+39 0322 923111 - giacomini.com

Installation

⚠ **WARNING.** Installation must be carried out by qualified operators according to the instructions provided.

⚠ **WARNING.** Before assembling the manifolds, lubricate the EPDM O-Ring with an appropriate lubricant.

Assembling the manifold

The modular manifolds (available with 2 or 4 outlets) are provided disassembled.
To connect them, screw one manifold to the other as far as it will go. Then it's possible to unscrew the manifold up to a maximum of 45° (1/8 turn) until the indicator notches **(A)** stamped on the manifold are perfectly aligned.
The O-Ring on male thread, ensures proper sealing with no need to use hemp or PTFE.

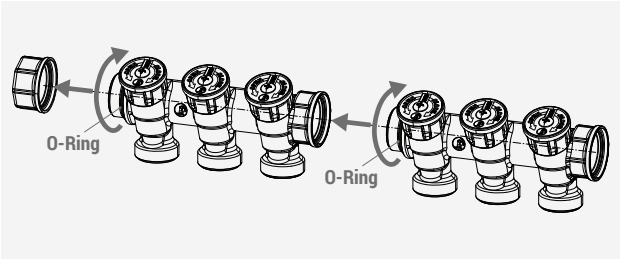

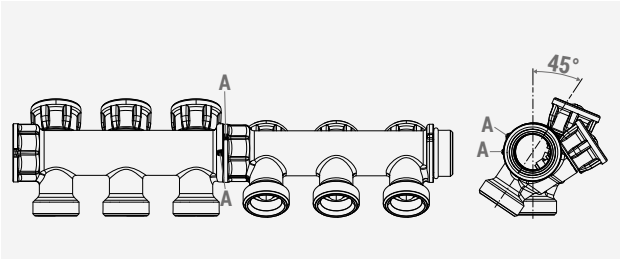

Connecting the adaptors

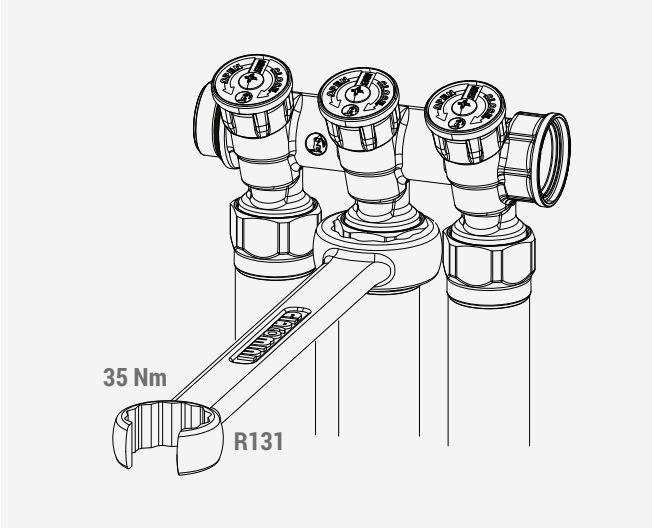

The 40-mm center distance of the outlets enables to also use compression-fitting adaptors for 20-mm plastic or multilayer pipes (R179EX027).
Tighten the adaptors with the R131Y004 wrench (tightening torque: 35 Nm).

Installing the handwheel plates

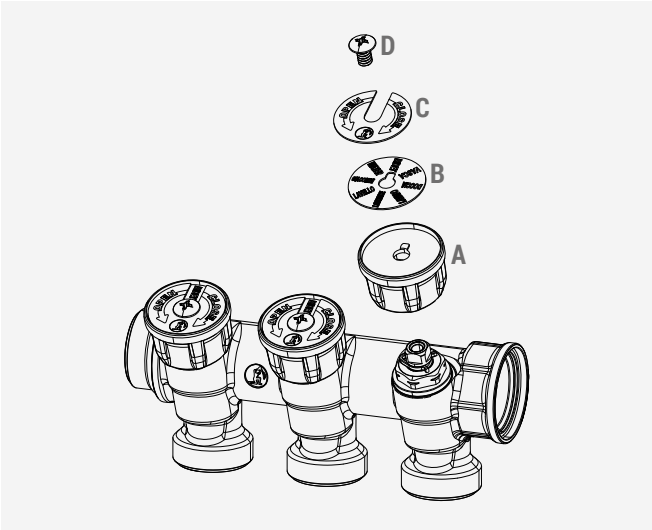

The handwheels (A) are connected to the shut-off cock with a screw (D) and include two metal plates:
- plate (B) shows the corresponding usage point (eg. shower, basin, etc.) in Italian on one side and in English on the other;
- plate (C) goes over plate (B) and features a blue side and a red side to promptly identify if hot or cold domestic water is flowing through the manifold.

This enables to streamline the quantity of stocked products.

Giacomini S.p.A.
Via per Alzo 39, 28017 San Maurizio d'Opaglio (NO) Italia
consulenza.prodotti@giacomini.com
+39 0322 923111 - giacomini.com

Installation in R595-1 cabinet

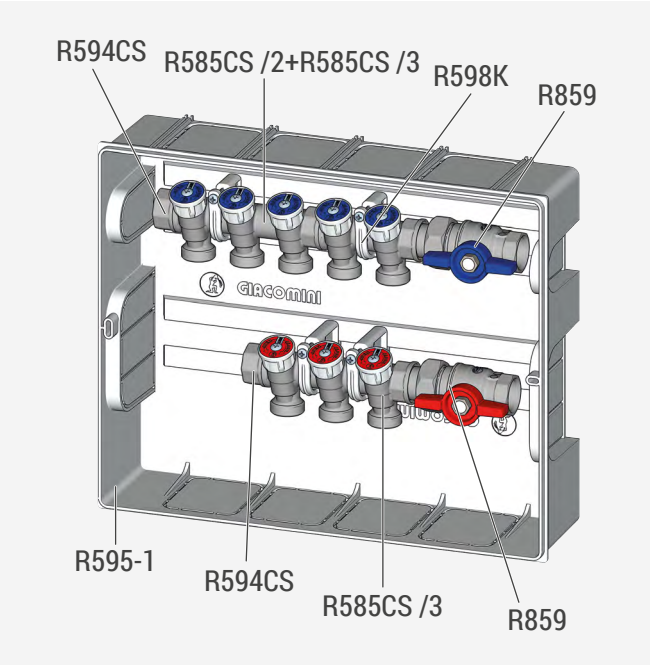

The assembly of the manifolds inside the R595-1 cabinet using the appropriate R598K sliding supports is carried out using horizontal guide rails, and therefore without constraints on positioning.
Thanks to the large openings at the bottom of the cabinet, it is possible to install manifolds with different center distances.
The example image shows the R585CS manifolds with R594CS end caps and R859 ball valves, installed in the R595-1 cabinet.
For cold domestic water are used two R585CS manifolds with 2 and 3 outlets, mounted in series with each other.
For hot domestic water is used a R585CS manifold with 3 outlets.

Wall installation with R588CS and R588CSK brackets

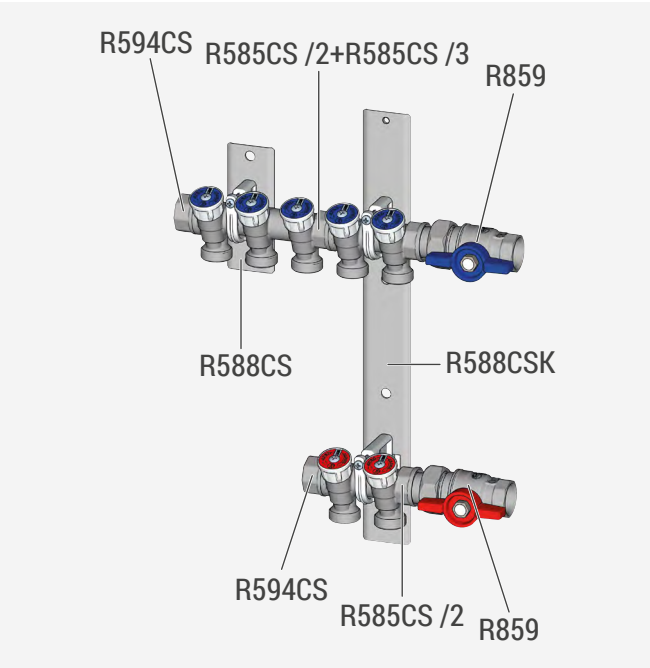

The wall-mounted manifolds are installed using the R588CS and R588CSK brackets, which must be bolted to the wall to ensure a secure and stable installation.
This solution allows maximum freedom of positioning and makes it possible to install manifolds with different center distances in a simple and practical way.
The example image shows the R585CS manifolds with R594CS end caps and R859 ball valves, secured to the wall using the R588CS (with single plastic support) and R588CSK (with double plastic support) brackets.
For cold domestic water are used two R585CS manifolds with 2 and 3 outlets, mounted in series with each other.
For hot domestic water is used a R585CS manifold with 2 outlets.

Giacomini S.p.A.
Via per Alzo 39, 28017 San Maurizio d'Opaglio (NO) Italia
consulenza.prodotti@giacomini.com
+39 0322 923111 - giacomini.com

Dimensions

R580CS

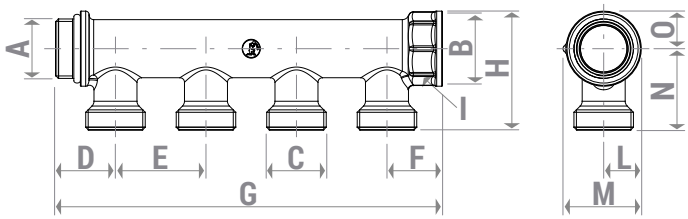

PRODUCT CODE	N. OF OUTLETS	A	B	C	D [mm]	E [mm]	F [mm]	G [mm]	H [mm]	I [mm]	L [mm]	M [mm]	N [mm]	O [mm]
R580CSX022	2							91						
R580CSX023	3	G 3/4"M	G 3/4"F	3/4"E	26	40	25	131	53	wr. 31	16,5	34,5	36	17
R580CSX024	4							171						
R580CSX042	2							91						
R580CSX043	3	G 1"M	G 1"F	3/4"E	26	40	25	131	57	wr. 37	20	42	37	20
R580CSX044	4							171						

R585CS

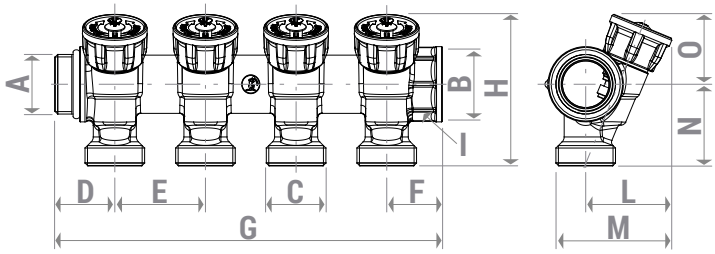

PRODUCT CODE	N. OF OUTLETS	A	B	C	D [mm]	E [mm]	F [mm]	G [mm]	H [mm]	I [mm]	L [mm]	M [mm]	N [mm]	O [mm]
R585CSX022	2							91						
R585CSX023	3	G 3/4"M	G 3/4"F	3/4"E	26	40	25	131	67	wr. 31	38	56	36	31
R585CSX024	4							171						
R585CSX042	2							91						
R585CSX043	3	G 1"M	G 1"F	3/4"E	26	40	25	131	66	wr. 37	38	61	37	29
R585CSX044	4							171						

Giacomini S.p.A.
Via per Alzo 39, 28017 San Maurizio d'Opaglio (NO) Italia
consulenza.prodotti@giacomini.com
+39 0322 923111 - giacomini.com

R595-1

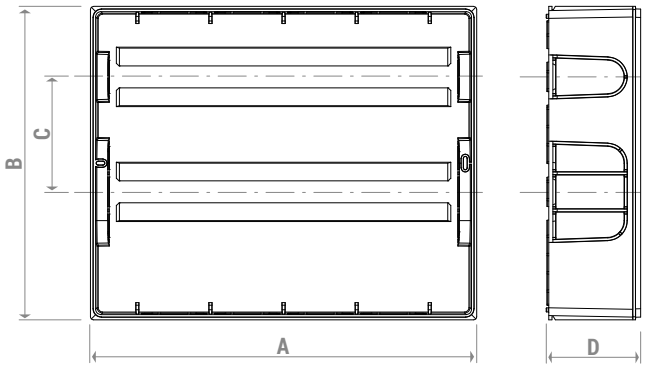

PRODUCT CODE	A [mm]	B [mm]	C [mm]	D [mm]
R595AY002	370	300	110	90
R595BY002	520	300	110	90
R595CY002	670	300	110	90

Product specifications

R580CS

Simple modular manifolds for domestic systems, in nickel-plated brass. Connections: G 3/4" x 3/4"E or G 1" x 3/4"E. Available with 2, 3 or 4 outlets. Connection threads perfectly phased for state-of-the-art alignment of the manifolds, and O-Ring seal. Fluids of use: domestic water, water with glycol for HVAC systems. Max. glycol percentage: 30%. Temperature range: 5÷110 °C. Max working pressure: 10 bar. Outlets center distance: 40 mm. Manifold body: EN 12165 CW617N nickel-plated brass. Seal O-Ring: EPDM.

R585CS

Modular manifolds with shut-off cocks for domestic systems, in nickel-plated brass. Connections: G 3/4" x 3/4"E or G 1" x 3/4"E. Available with 2, 3 or 4 outlets. Connection threads perfectly phased for state-of-the-art alignment of the manifolds, and O-Ring seal. Handwheels with usage point identification plates included. Fluids of use: domestic water, water with glycol for HVAC systems. Max. glycol percentage: 30%. Temperature range: 5÷110 °C. Max working pressure: 10 bar. Outlets center distance: 40 mm. Manifold body: EN 12165 CW617N nickel-plated brass. Seal O-Ring: EPDM. Stopper: EN 12164 CW614N brass. Handwheel: ABS. Handwheel plates: aluminum.

Safety Warning. Installation, commissioning and periodical maintenance of the product must be carried out by qualified operators in compliance with national regulations and/or local standards. A qualified installer must take all required measures, including use of Individual Protection Devices, for his and others' safety. An improper installation may damage people, animals or objects towards which Giacomini S.p.A. may not be held liable.

Package Disposal. Carton boxes: paper recycling. Plastic bags and bubble wrap: plastic recycling.

Additional information. For more information, go to giacomini.com or contact our technical assistance service. This document provides only general indications. Giacomini S.p.A. may change at any time, without notice and for technical or commercial reasons, the items included herewith. The information included in this technical sheet do not exempt the user from strictly complying with the rules and good practice standards in force.

Product Disposal. Do not dispose of product as municipal waste at the end of its life cycle. Dispose of product at a special recycling platform managed by local authorities or at retailers providing this type of service.

Giacomini S.p.A.
Via per Alzo 39, 28017 San Maurizio d'Opaglio (NO) Italia
consulenza.prodotti@giacomini.com
+39 0322 923111 - giacomini.com