R280KL

Compact kit for terminal units (fan coils)

Energy Management

Datasheet
1209EN 02/2026

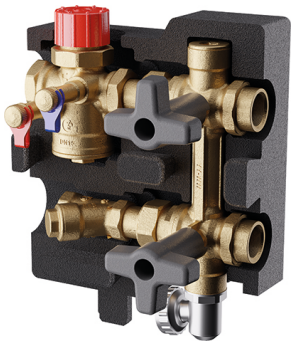

R280KL
VIEW OF INTERNAL COMPONENTS

R280KL WITH INSULATION AND ACTUATOR ASSEMBLED

Preassembled compact kit, version with fan coil connections on the left, combining the components required for balancing, control, flushing and commissioning of HVAC terminal units (fan coils, chilled beams, etc.) with the main distribution network. The kit consists of a double ball diverting valve for by-pass and maintenance of the unit, a Y-filter, a pressure independent control valve (PICV), a drain cock and two pressure ports to check the flow rate.
Thanks to the special double ball diverting valve it is possible to clean the filter and operate on the unit with no need to drain the entire system. The kit is quick to install thanks to the use of only four connections which also prevent possible errors.

Its pressure independent control valve (PICV) enables to regulate and keep constant the flow rate in the terminal unit when the differential pressure of the main circuit varies.
The terminal unit can also be isolated and the flow can be bypassed through the double ball diverting valve.
The water flow entering the terminal unit, which also runs through the PICV, is filtered by the Y-filter.
The drain cock drains the water during maintenance and flushing operations.

Benefits

Benefits for installers
- Quick installation, reduced on-site manpower and costs
- Quick connection (only 4 connections required)
- Avoids installation errors
- Semplified commissioning

Benefits for planners
- Simplified solution for the design of all required components
- Avoids installation errors

Giacomini S.p.A.
Via per Alzo 39, 28017 San Maurizio d'Opaglio (NO) Italia
consulenza.prodotti@giacomini.com
+39 0322 923372 - giacomini.com

Versions and product codes

				PICV							
PRODUCT CODE	CONNECTIONS: BOILER ROOM SIDE x FAN COIL SIDE	CENTER DISTANCE SUPPLY-RETURN [mm]	KIT Kv IN BY-PASS	DN	INDICATOR COLOR	HANDWHEEL COLOR	WORKING FLOW RATE RANGE [l/h]		WORKING DIFFERENTIAL PRESSURE RANGE [kPa]		ACTUATORS FOR PICV (accessories)
							L (LOW)	H (HIGH)	WITH ACTUATOR R473/R473HE	WITH K281/K281-1 OR NO ACTUATOR	
R280KLY000	G 1/2"F x G 1/2"F	80	3,1	15	RED	GREY	35÷520 (single range)		25÷400	25÷800	K281, K281-1, R473, R473HE
R280KLY001	G 1/2"F x G 1/2"F	80	3,1	15	BLUE	RED	150÷380	180÷630	25÷400	25÷800	K281, K281-1, R473, R473HE
R280KLY002	G 3/4"F x G 3/4"F	80	3,1	20	GREEN	BLUE	290÷1000	860÷1500	25÷400	25÷800	K281, K281-1, R473, R473HE

Accessories

- **K281X022 (K281):** ON/OFF actuator, 24 V
- **K281X062 (K281-1):** 0...10 V actuator for flow rate proportional linear control, 24 V
- **K281X063 (K281-1):** 0...10 V actuator for flow rate proportional linear control, 24 V, with fail safe
- **R473X221 (R473):** 230 V thermo-electric actuator, normally closed, 2-conductor wire, IP40, 2,5 W
- **R473X222 (R473):** 24 V thermo-electric actuator, normally closed, 2-conductor wire, IP40, 2,5 W
- **R473HEX001 (R473HE):** 230 V thermo-electric actuator, normally closed, 2-conductor wire, IP54, 1 W
- **R453FY002:** M30 x 1,5 mm adapter ring for installation of R473/R473M thermo-electric actuators
- **R225EY001:** electronic differential pressure gauge and flow rate calculator, including M10 x 1 mm needle probes
- **P74M-1:** neodymium magnet with stainless steel coating for installation inside the Y-filter

Spare parts

- **R73PY010:** key for PICV flow rate presetting
- **P206Y001:** pair of pressure ports
- **P22V:** replacement handwheels with M30 x 1.5 mm connection, in grey, red or blue color, for PICV

Giacomini S.p.A.
Via per Alzo 39, 28017 San Maurizio d'Opaglio (NO) Italia
consulenza.prodotti@giacomini.com
+39 0322 923372 - giacomini.com

Technical data

Main technical data

- Fluids: water, glycol-based solutions (max. 50% of glycol)
- Working temperature range: 5÷110 °C
- Ambient temperature: 1÷50 °C
- Max working pressure: 25 bar
- Flow rate setting range (based on PICV setting): see "Versions and product codes" table
- Max differential pressure at PICV ends: see "Versions and product codes" table
- Filtering capacity: 500 µm
- Actuator connection: M30 x 1,5 mm

Materials

- Main components: EN 12165 CW602N (DZR) brass
- Diverting valve handles: plastic PA66-GF30
- Ball valve gaskets: PTFE
- Gaskets of other components: EPDM
- Filter mesh: AISI 304 stainless steel
- Insulation: expanded EPP (density 60 g/l; thermal conductivity 0,039 W/m K)

Components

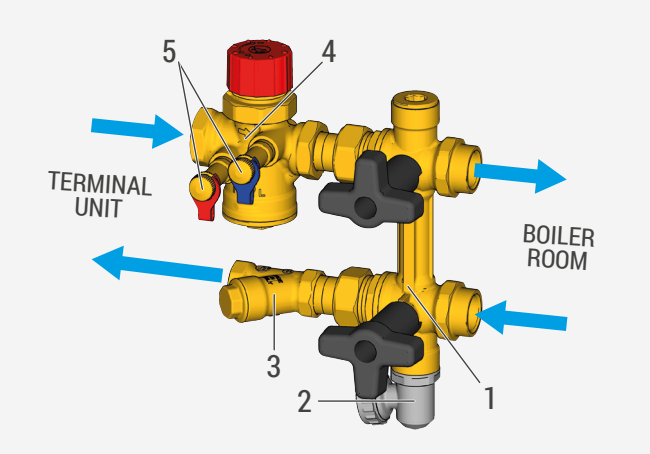

1	Double ball diverting ball valve for kit bypass
2	Drain cock
3	Y-filter
4	Pressure independent control valve (PICV)
5	Probe holder

Double ball diverting valve (Ref.1)

The double ball diverting valve provides a bypassing function thanks to the special shape of its ball.
The three lugs on the handles visually indicate the direction of flow inside the valve.

Y-filter (Ref.3)

The Y-filter allows impurities present in the system to be filtered out and removed. By closing the diverter valve, the filter mesh can be removed for cleaning operations without having to drain the system (see the "Maintenance" section).
It is also possible to install the P74M-1 magnet inside the filter to filter even the smallest ferrous particles.

Pressure independent control valve (PICV) (Ref.4)

The PICV provides top-notch energy efficiency and state-of-the-art control of the flow rate.
It is a 3-in-1 valve (DPCV, balancing and control) for quick and convenient commissioning with no setting design required by the planner.
The PICV can be controlled automatically through a proportional actuator (0...10 V) to set the flow rate within the working range defined by the cartridge calibration, or through an ON-OFF actuator to shut off the circuit.
These two control options enable the PICV to perfectly adapt itself to the type of control required by the system.

Giacomini S.p.A.
Via per Alzo 39, 28017 San Maurizio d'Opaglio (NO) Italia
consulenza.prodotti@giacomini.com
+39 0322 923372 - giacomini.com

Hydraulic diagram

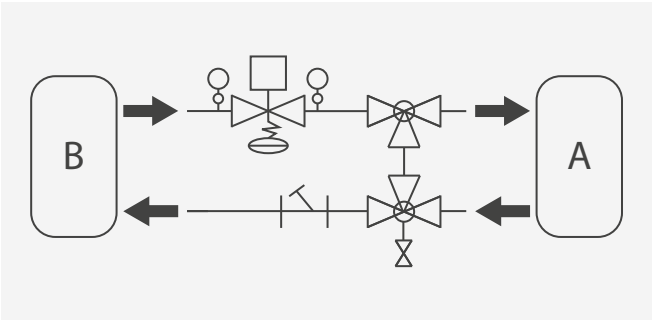

	Double ball diverting ball valve for kit bypass
	Drain cock
	Y-filter
	Probe holder
	Pressure independent control valve (PICV)
A	Boiler room
B	Terminal unit (fan coil)

Installation

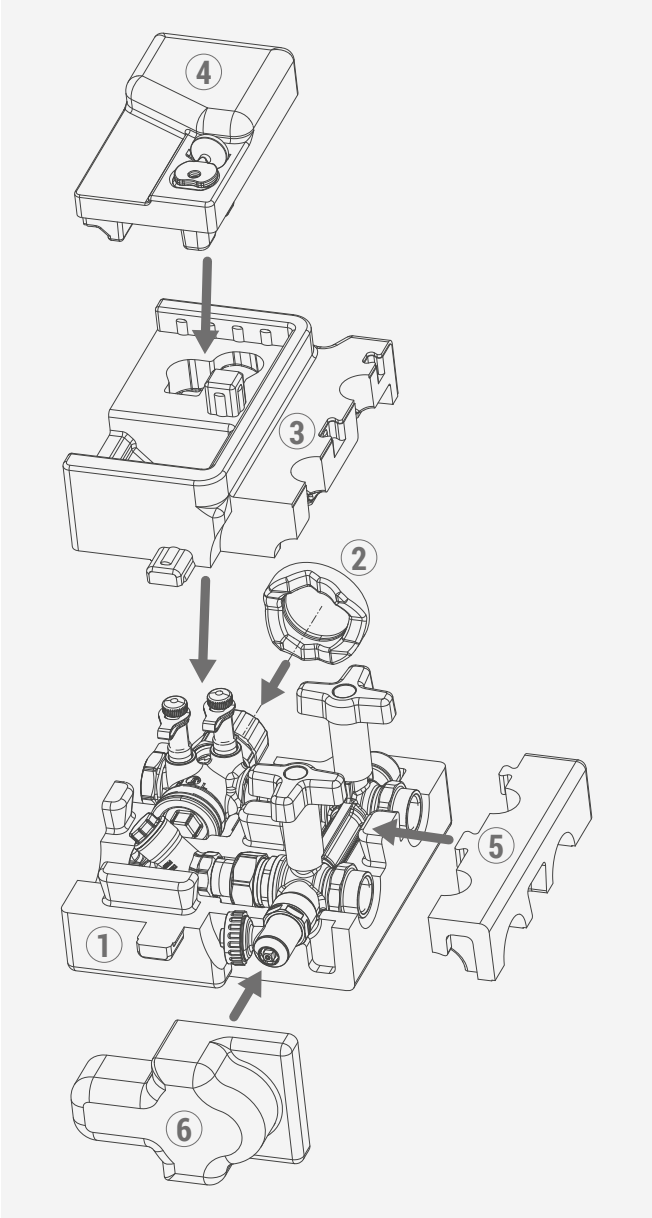

The R280KL kit is provided fully preassembled inside the insulation shell.
The insulation is divided in six parts:

- The lower shell **(1)** houses the kit components.
- The cylindrical component **(2)** is installed on the PICV ring.
- The upper shell **(3)** fits on the lower shell **(1).**
- The small upper shell **(4)** fits on the large upper shell **(3)**. Remove it to perform filter maintenance or to measure the PICV differential pressure using the probe holders.
- The side shell **(5)** fits on the the upper shell **(3)**.
- Component **(6)** fits on the shells **(1)** and **(3)**. Remove it to open the drain cock.

The kit must be installed upstream of the terminal unit (fan coil) and it includes the main components required for state-of-the-art operation.

NOTE. The kit can be installed in any direction, yet the Y-filter and the PICV with its actuator cannot be installed upside down.

Giacomini S.p.A.
Via per Alzo 39, 28017 San Maurizio d'Opaglio (NO) Italia
consulenza.prodotti@giacomini.com
+39 0322 923372 - giacomini.com

Operation

The R280KL kit provides the following operations:

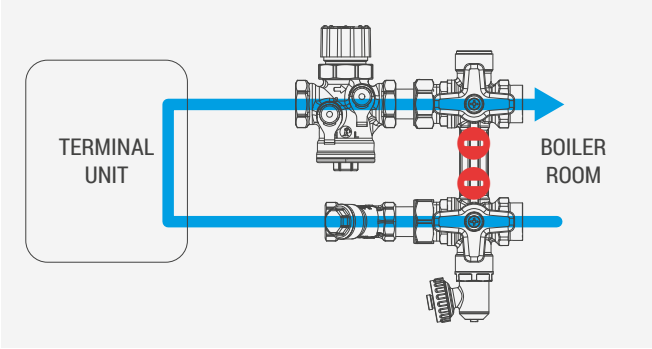

1) Normal operation
Supply and return balls of the diverting valve open (Components - Ref.1) and drain cock closed (Components - Ref.2).

⚠ **WARNING.** During normal operation make sure the drain cock is closed with its cap on.

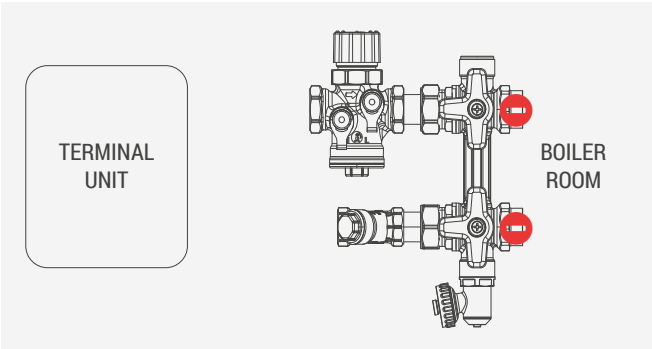

2) Shut-off / Maintenance
Supply and return balls of the diverting valve closed (Components - Ref.1) and drain cock closed (Components - Ref.2).

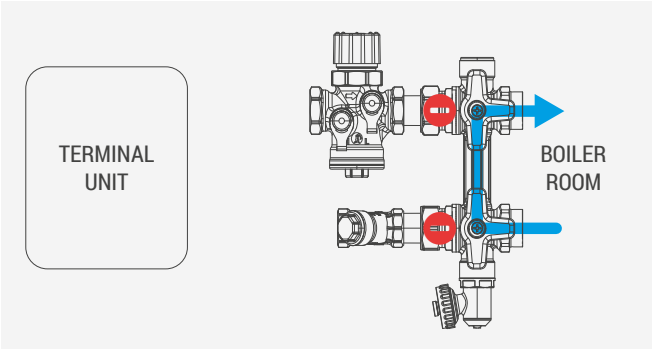

3) System flushing / Terminal unit by-pass
Supply and return balls of the diverting valve in bypass position (Components - Ref.1) and drain cock closed (Components - Ref.2).
This completely isolates the fan coil, allowing the system to be flushed and preventing debris from entering the fan coil and PICV (Components - Ref.4).

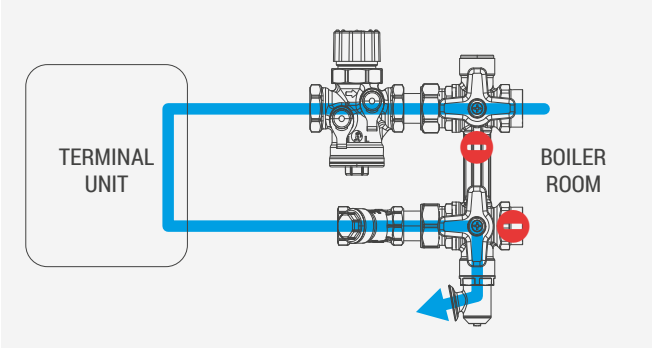

4) Fan coil flushing with reversed flow
Return ball open, supply ball closed (Components - Ref.1) and drain cock open (Components - Ref.2).

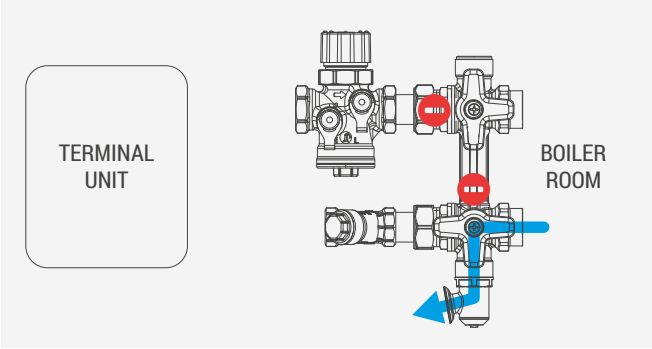

5) System flushing with direct flow
Return ball closed, supply ball open (Components - Ref.1) and drain cock open (Components - Ref.2).

✎ **NOTE.** Flushing and maintenance operations comply with the BG 29/2021 (BSRIA) guidelines.

Commissioning

Presetting of max flow rate, PICV

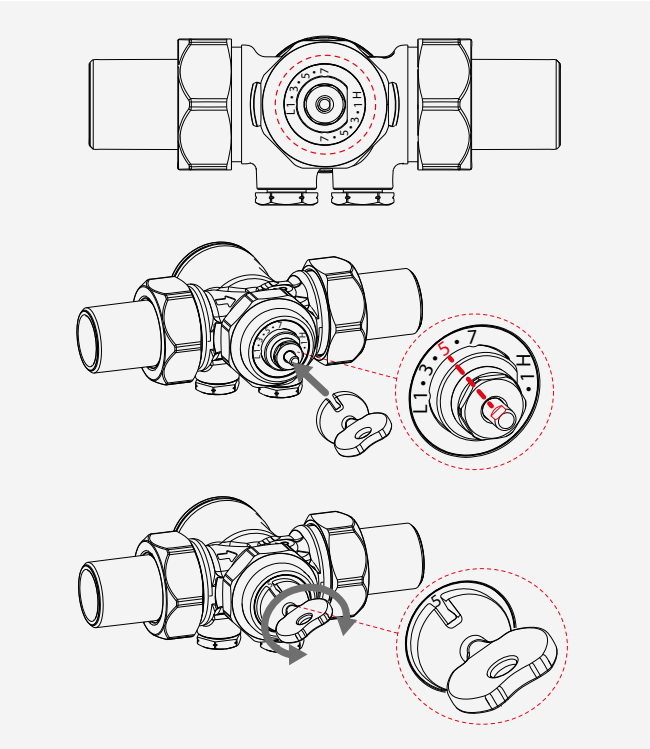

The pressure independent control valve (PICV) (Components - Ref.4) is equipped with a dual-scale flow rate setting:

- **L (LOW):** for low flow rates
- **H (HIGH):** for high flow rates

To set the valve to the required flow rate, turn the valve stem clockwise or counterclockwise using the **R73PY010 key** (included with the kit) till reaching the corresponding value printed on the bonnet plastic disk (refer to the table below to identify it.)

Change over from one setting scale to the other can be implemented at any time, even when the system is on; this enables to select the required max flow rate without replacing the valve.

The dual scale guarantees a more accurate regulation as the controlled flow rate range is narrowed down and does not require the use of cartridges with different characteristics.

PRODUCT CODE	WORKING DIFFERENTIAL PRESSURE RANGE [kPa]	
	WITH R473/R473HE THERMO-ELECTRIC ACTUATOR	WITH K281/K281-1 ACTUATOR OR NO ACTUATOR
R280KLY000	25÷400	25÷800
R280KLY001	25÷400	25÷800
R280KLY002	25÷400	25÷800

WORKING FLOW RATE RANGE [l/h]										
SETTING SCALE	MIN	1	2	3	4	5	6	7	8	9
SINGLE	35	95	120	230	310	400	460	520	-	-
L (LOW)	-	150	175	200	250	300	340	380	-	-
H (HIGH)	-	180	250	350	440	500	570	630	-	-
L (LOW)	-	290	400	500	640	730	900	1000	-	-
H (HIGH)	-	860	900	940	1110	1270	1330	1500	-	-

System flushing

Prior to commissioning, the system must be flushed according to the indications described in "Operation".

System commissioning

Fully open the balls of the diverting valve and start up the hydraulic system.

Air venting

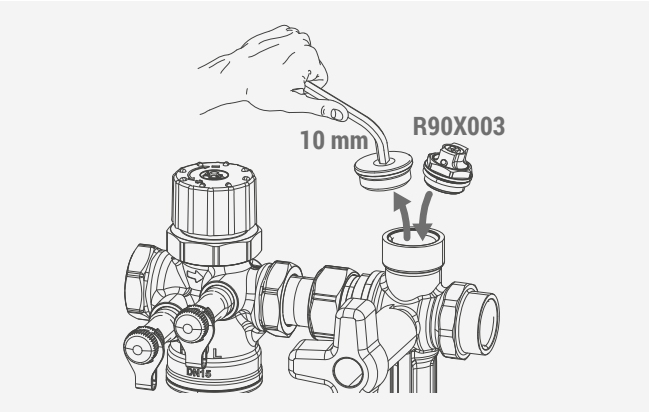

⚠ WARNING.

Install an air vent valve on the system circuit to release the air after servicing and cleaning the components.

R90 air vent valve can be installed in place of the plug on the diverting valve (Components - Ref.1).

Reading the flow rate

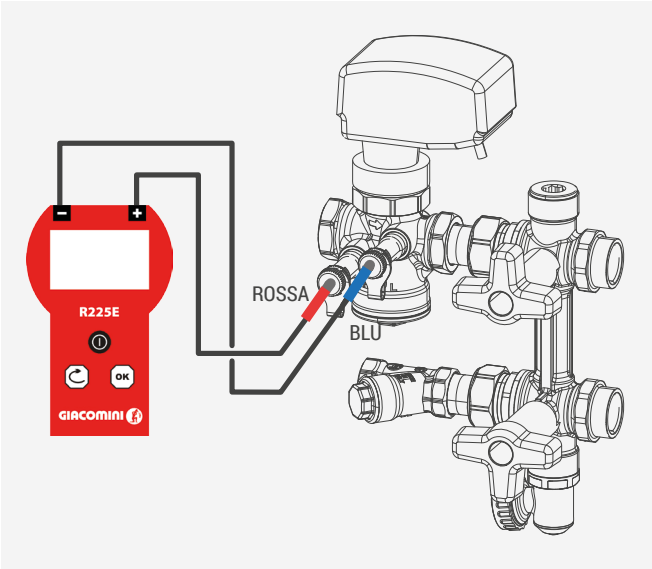

The water flow rate inside the kit can be verified through the probe holders, their probes and the R225E differential pressure gauge.

NOTE. To check the flow rate using the probe holders, it is possible to remove only the small upper insulation shell (see paragraph "Installation - Ref.4").

Maintenance

Check the kit at least once a year upon seasonal change over from heating to cooling.
During inspection, check the components below:
- Y-filter: rinse under running water (see "Cleaning the filter".)
- Actuator: check its operation; should it fail to work with proper wiring, replace the actuator.
- Double ball diverting valve: check operations of the balls.

NOTE. For periodical maintenance, also refer to the local standards.

Cleaning the filter

NOTE. To clean the filter it is possible to remove only the small upper insulation shell (see paragraph "Installation - Ref.4").

1) Close the supply and return balls of the diverting valve (see "Operation - Shut-off/Maintenance").
2) Loosen the octagonal cap of the filter.
3) Remove the filter mesh and rinse it under running water.
4) Re-insert the filter mesh inside the body and tighten the filter cap on.
5) Open the supply and return balls of the diverteing valve (see "Operation - Normal operation") resume regular operation of the system.

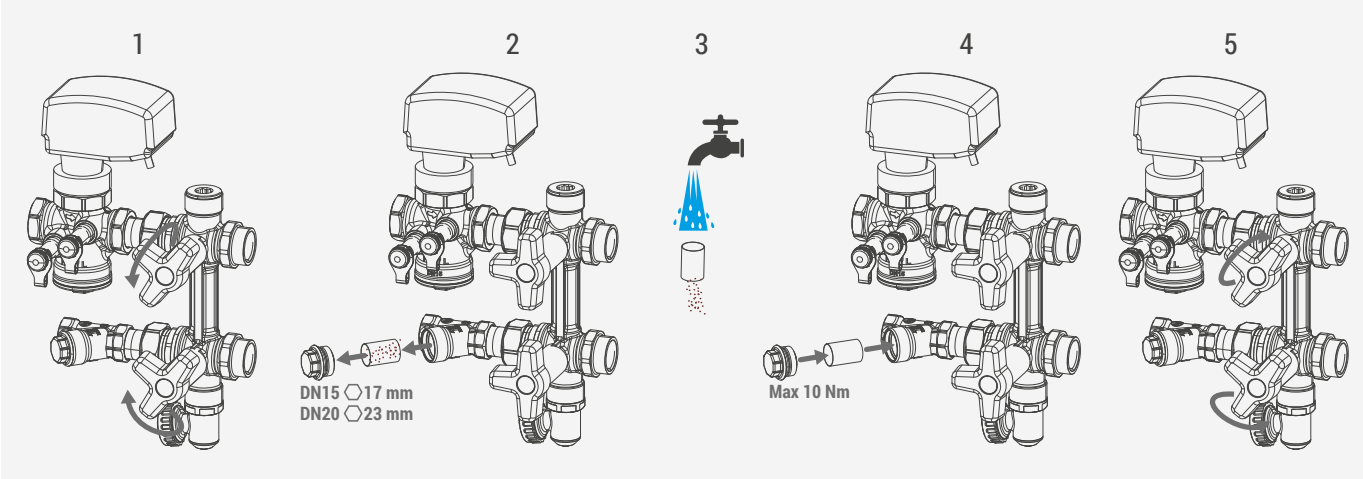

Giacomini S.p.A.
Via per Alzo 39, 28017 San Maurizio d'Opaglio (NO) Italia
consulenza.prodotti@giacomini.com
+39 0322 923372 - giacomini.com

Actuators installation and electrical connections

Actuators installation

Two different types of actuators can be installed to automize the pressure independent control valve (PICV).
Install the K281/K281-1 actuators by screwing the ring nut on the M30 x 1,5 mm threaded connection of the valve body.
Install the R473 thermo-electric actuators with Clip Clap connection on the threaded connection of the valve body after having assembled the R453FY002 adaptor ring nut (to be ordered separately).
The R473HE thermo-electric actuators with M30 x 1,5 mm connection are installed directly on the threaded connection of the valve body.

	PRODUCT CODE	POWER SUPPLY [V]	TYPE
	K281X022	24	ON/OFF
	K281X062	24	0...10 V
	K281X063	24	0...10 V
	R473X221	230	ON/OFF
	R473X222	24	ON/OFF
	R473HEX001	230	ON/OFF

K281X022 electric connections

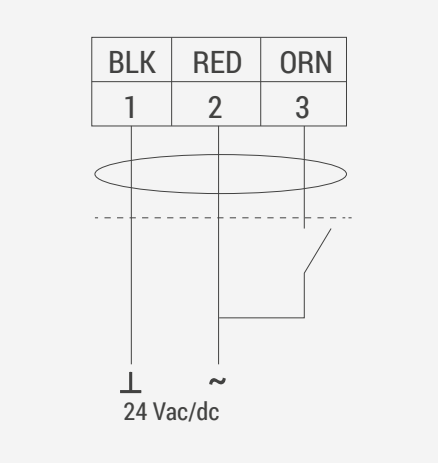

CONNECTION COLOR	FUNCTION
Black (BLK)	Common (-)
Red (RED)	Phase (+)
Orange (ORN)	Control

K281X062 electric connections

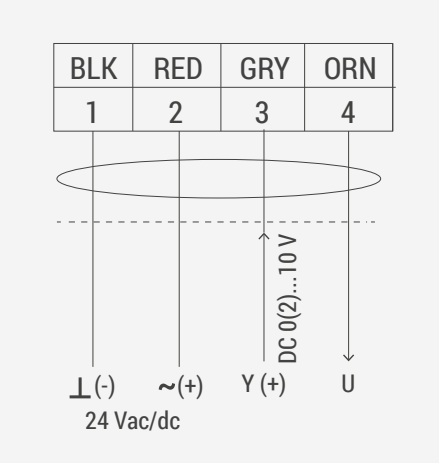

CONNECTION COLOR	FUNCTION
Black (BLK)	Common (-)
Red (RED)	Phase (+)
Grey (GRY)	Control signal
Orange (ORN)	Feedback signal

K281X063 electric connections

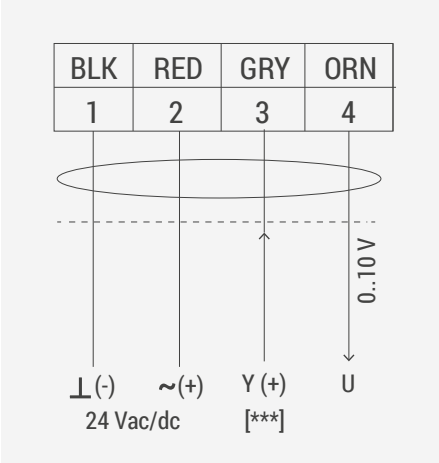

CONNECTION COLOR	FUNCTION
Black (BLK)	Common (-)
Red (RED)	Phase (+)
Grey (GRY)	Control signal 0..10 Vdc
Orange (ORN)	Feedback signal

R473X221, R473X222, R473HEX001 electric connections

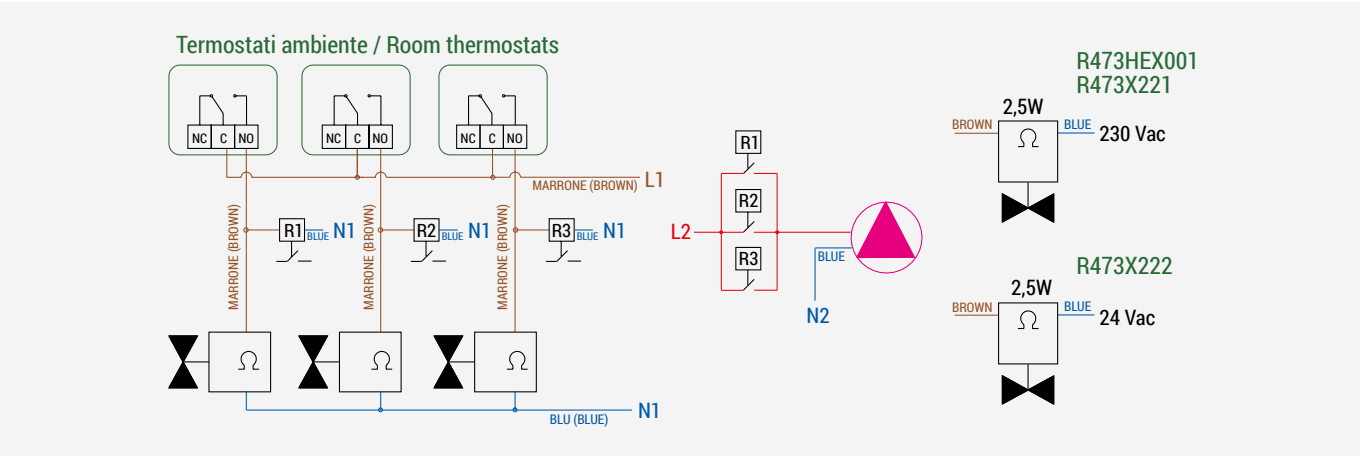

Giacomini S.p.A.
Via per Alzo 39, 28017 San Maurizio d'Opaglio (NO) Italia
consulenza.prodotti@giacomini.com
+39 0322 923372 - giacomini.com

Dimensions

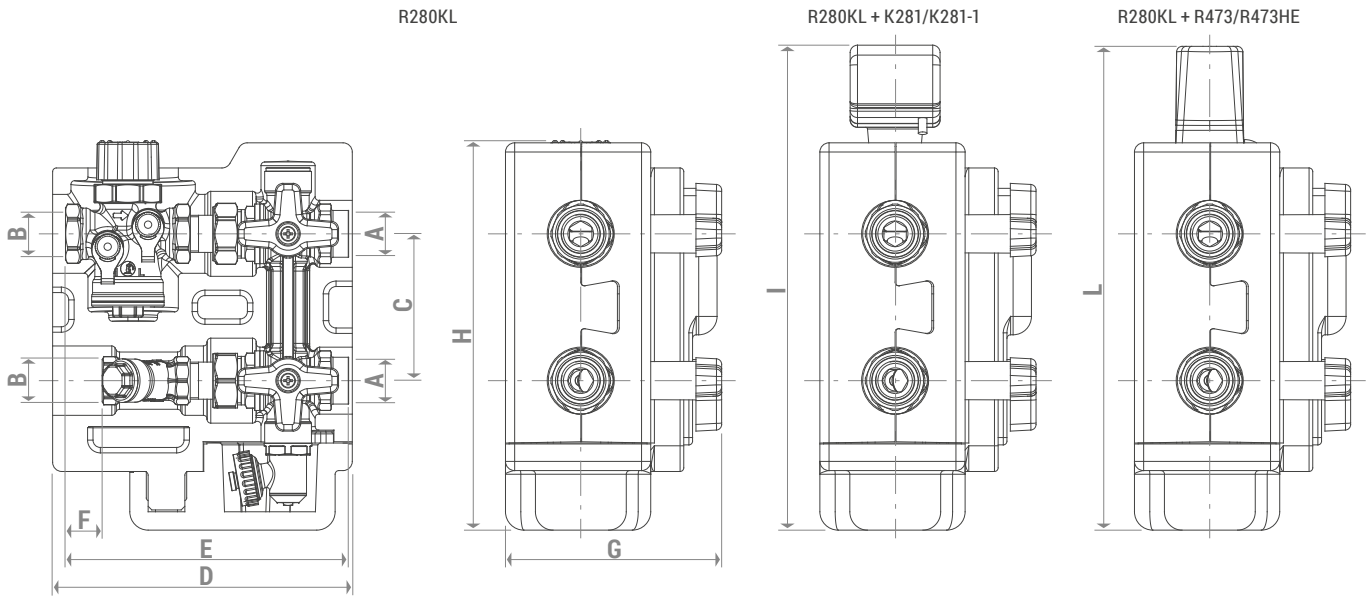

PRODUCT CODE	CONNECTIONS A x B	C [mm]	D [mm]	E [mm]	F [mm]	G [mm]	H [mm]	I [mm]	L [mm]
R280KLY000	G 1/2"F x G 1/2"F	80	163	154	20	118	212	264	264
R280KLY001	G 1/2"F x G 1/2"F								
R280KLY002	G 3/4"F x G 3/4"F			149	11				

Product specifications

R280KLY000

Preassembled compact kit for connection and control of heating and cooling system terminal units. Pressure independent control valve (PICV), Y-filter, double ball diverting valve, drain cock and pressure ports with cap included. Connections G 1/2"F x G 1/2"F, DN15. Connections center distance: 80 mm. Range for flow rate setting: 35÷520 l/h. Max working pressure: 25 bar. Nominal Δp working range (PICV): 25÷400 kPa with actuator R473/R473HE; 25÷800 kPa with actuator K281/K281-1 or without actuator. Working temperature range 5÷110 °C. Ambient temperature range 1÷50 °C. Filtering capacity: 500 µm. Actuator connection M30 x 1,5 mm. Fluids: water, glycol-based solutions (max 50% of glycol). Main components made of EN 12165 CW602N (DZR) brass. PTFE ball valve gaskets. Gaskets of other components in EPDM. AISI 304 stainless steel filter mesh. Expanded EPP insulation.

R280KLY001

Preassembled compact kit for connection and control of heating and cooling system terminal units. Pressure independent control valve (PICV), Y-filter, double ball diverting valve, drain cock and pressure ports with cap included. Connections G 1/2"F x G 1/2"F, DN15. Connections center distance: 80 mm. Dual range for flow rate setting: 150÷380 l/h; 180÷630 l/h. Max working pressure: 25 bar. Nominal Δp working range (PICV): 25÷400 kPa with actuator R473/R473HE; 25÷800 kPa with actuator K281/K281-1 or without actuator. Working temperature range 5÷110 °C. Ambient temperature range 1÷50 °C. Filtering capacity: 500 µm. Actuator connection M30 x 1,5 mm. Fluids: water, glycol-based solutions (max 50% of glycol). Main components made of EN 12165 CW602N (DZR) brass. PTFE ball valve gaskets. Gaskets of other components in EPDM. AISI 304 stainless steel filter mesh. Expanded EPP insulation.

R280KLY002

Preassembled compact kit for connection and control of heating and cooling system terminal units. Pressure independent control valve (PICV), Y-filter, double ball diverting valve, drain cock and pressure ports with cap included. Connections G 3/4"F x G 3/4"F, DN20. Connections center distance: 80 mm. Dual range for flow rate setting: 290÷1000 l/h; 860÷1500 l/h. Max working pressure: 25 bar. Nominal Δp working range (PICV): 25÷400 kPa with actuator R473/R473HE; 25÷800 kPa with actuator K281/K281-1 or without actuator. Working temperature range 5÷110 °C. Ambient temperature range 1÷50 °C. Filtering capacity: 500 µm. Actuator connection M30 x 1,5 mm. Fluids: water, glycol-based solutions (max 50% of glycol). Main components made of EN 12165 CW602N (DZR) brass. PTFE ball valve gaskets. Gaskets of other components in EPDM. AISI 304 stainless steel filter mesh. Expanded EPP insulation.

Safety Warning. Installation, commissioning and periodical maintenance of the product must be carried out by qualified operators in compliance with national regulations and/or local standards. A qualified installer must take all required measures, including use of Individual Protection Devices, for his and others' safety. An improper installation may damage people, animals or objects towards which Giacomini S.p.A. may not be held liable.

Package Disposal. Carton boxes: paper recycling. Plastic bags and bubble wrap: plastic recycling.

Additional information. For more information, go to giacomini.com or contact our technical assistance service. This document provides only general indications. Giacomini S.p.A. may change at any time, without notice and for technical or commercial reasons, the items included herewith. The information included in this technical sheet do not exempt the user from strictly complying with the rules and good practice standards in force.

Product Disposal. Do not dispose of product as municipal waste at the end of its life cycle. Dispose of product at a special recycling platform managed by local authorities or at retailers providing this type of service.

Giacomini S.p.A.
Via per Alzo 39, 28017 San Maurizio d'Opaglio (NO) Italia
consulenza.prodotti@giacomini.com
+39 0322 923372 - giacomini.com