R280KC

Energy Management

Datasheet
1114EN 02/2026

Compact kit for terminal units (fan coils) “Premium” version

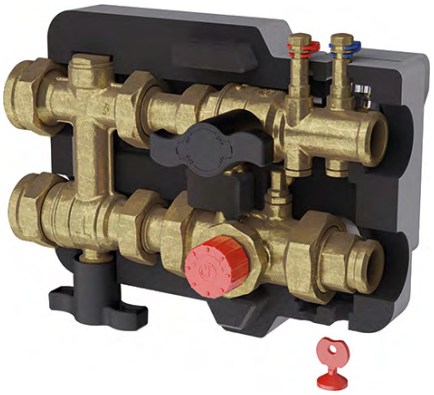

R280KC
VIEW OF INTERNAL COMPONENTS

R280KC WITH INSULATION AND ACTUATOR ASSEMBLED

NOTE. The pictures show the fan coil kit with rigid expanded PPR insulation in dark gray color (codes R280KCY000/001/002/100/101/102).
The codes R280KCY003/103 mount a soft expanded PE insulation in light gray color.

PRESENTATION

Preassembled compact kit, “Premium” version, combining the components required for balancing, control, flushing and commissioning of HVAC terminal units (fan coils, chilled beams, etc.) with the main distribution network.
The kit consists of a diverting ball valve to bypass the unit, a full-port ball valve with integrated filter, a pressure independent control valve (PICV), a drain cock and four pressure ports to measure the differential pressure and the flow rate.
Thanks to the two ball valves it is possible to clean the filter and operate on the unit with no need to drain the entire system.
The kit is quick to install thanks to the use of only four connections which also prevent possible errors.

Its pressure independent control valve (PICV) enables to regulate and keep constant the flow rate in the terminal unit when the differential pressure of the main circuit varies.
The terminal unit can also be isolated and the flow can be bypassed through the ball valves installed.
The water flow entering the terminal unit, which also runs through the PICV, is filtered by the filter integrated in the shut-off ball valve.
The drain cock drains the water during maintenance and flushing operations.

Benefits

Benefits for installers
- Quick installation, reduced on-site manpower and costs
- Quick connection (only 4 connections required)
- Avoids installation errors
- Semplified commissioning

Benefits for planners
- Simplified solution for the design of all required components
- Avoids installation errors

Giacomini S.p.A.
Via per Alzo 39, 28017 San Maurizio d'Opaglio (NO) Italy
consulenza.prodotti@giacomini.com
+39 0322 923372 - giacomini.com

Versions and product codes

PRODUCT CODE	CONNECTIONS: BOILER ROOM SIDE x FAN COIL SIDE	CENTER DISTANCE SUPPLY-RETURN [mm]	KIT Kv IN BY-PASS	Kv VENTURI FLOW METER	PICV DN	PICV INDICATOR COLOR	PICV HANDWHEEL COLOR	PICV WORKING FLOW RATE RANGE [l/h] L (LOW)	PICV WORKING FLOW RATE RANGE [l/h] H (HIGH)	PICV WORKING DIFFERENTIAL PRESSURE RANGE [kPa] WITH ACTUATOR R473/R473HE	PICV WORKING DIFFERENTIAL PRESSURE RANGE [kPa] WITH K281/ K281-1 OR NO ACTUATOR	ACTUATORS FOR PICV (accessories)	BRASS TYPE
R280KCY000	1-1/2"UNS-M x G 1"M	60	2,3	0,4	15	RED	GREY	35÷520 (single range)		25÷400	25÷800	K281, K281-1, R473, R473HE	CW617N EN 12165
R280KCY001	1-1/2"UNS-M x G 1"M	60	2,3	1,9	15	BLUE	RED	150÷380	180÷630	25÷400	25÷800	K281, K281-1, R473, R473HE	
R280KCY002	1-1/2"UNS-M x G 1"M	60	2,3	4,5	20	GREEN	BLUE	290÷1000	860÷1500	25÷400	25÷800	K281, K281-1, R473, R473HE	
R280KCY003	G 1-1/2"M x G 1"M	80	3,7	9,0	25	BLUE	RED	600÷3500 (single range)		n.d.	25÷400	K281, K281-1	
R280KCY100	1-1/2"UNS-M x G 1"M	60	2,3	0,4	15	RED	GREY	35÷520 (single range)		25÷400	25÷800	K281, K281-1, R473, R473HE	"DZR" CW602N EN 12165
R280KCY101	1-1/2"UNS-M x G 1"M	60	2,3	1,9	15	BLUE	RED	150÷380	180÷630	25÷400	25÷800	K281, K281-1, R473, R473HE	
R280KCY102	1-1/2"UNS-M x G 1"M	60	2,3	4,5	20	GREEN	BLUE	290÷1000	860÷1500	25÷400	25÷800	K281, K281-1, R473, R473HE	
R280KCY103	G 1-1/2"M x G 1"M	80	3,7	9,0	25	BLUE	RED	600÷3500 (single range)		n.d.	25÷400	K281, K281-1	

Accessories

- **K281X022 (K281):** ON/OFF actuator, 24 V
- **K281X062 (K281-1):** 0...10 V actuator for flow rate proportional linear control, 24 V
- **K281X063 (K281-1):** 0...10 V actuator for flow rate proportional linear control, 24 V, with fail safe
- **R473X221 (R473):** 230 V thermo-electric actuator, normally closed, 2-conductor wire, IP40, 2,5 W
- **R473X222 (R473):** 24 V thermo-electric actuator, normally closed, 2-conductor wire, IP40, 2,5 W
- **R473HEX001 (R473HE):** 230 V thermo-electric actuator, normally closed, 2-conductor wire, IP54, 1 W
- **R453FY002:** M30 x 1,5 mm adapter ring for installation of R473/R473M thermo-electric actuators
- **R225EY001:** electronic differential pressure gauge and flow rate calculator, including M10 x 1 mm needle probes
- **P206Y001:** pair of pressure ports
- **P206Y011:** pair of adjustable fittings with pressure ports
- **P15KFM:** pair of brass tail pieces, male-flat seat connections, complete with nuts and gaskets (see table below)
- **P15KFF, R37KFF:** pair of brass tail pieces, female-flat seat connections, complete with nuts and gaskets (see table below)
- **P15KEFM:** pair of eccentric brass tail pieces, male-flat seat connections, complete with nuts and gaskets, to reduce the supply-return center distance from 60 to 40 mm (see table below)

TAIL PIECES FOR BOILER ROOM SIDE CONNECTIONS		
SERIES	PRODUCT CODE	CONNECTION
P15KFF*	P15FY023	1-1/2"UNS-F x G 1/2"F
	P15FY024	1-1/2"UNS-F x G 3/4"F
	P15FY025	1-1/2"UNS-F x G 1"F
R37KFF**	R37KY005	G 1-1/2"F x G 1"F

* Only for R280KCY000/001/002/100/101/102 codes.
** Only for R280KCY003/103 codeS.
*** For all codes.

NOTE. Pairs of tail pieces to be ordered separately.
Additional fitting versions are available upon request for connection of the kit.

TAIL PIECES FOR FAN COIL SIDE CONNECTIONS		
SERIES	PRODUCT CODE	CONNECTION
P15KFM***	P15Y015	G 1"F x G 1/2"M
	P15Y016	G 1"F x G 3/4"M
	P15Y017	G 1"F x G 1"M
P15KFF***	P15FY003	G 1"F x Rp 1/2"
	P15FY004	G 1"F x Rp 3/4"
	P15FY005	G 1"F x Rp 1"
P15KEFM***	P15EY014	G 1"F x G 3/4"M
	P15EY024	G 1"F x B.18

Spare parts

- **R73PY010:** key for PICV flow rate presetting
- **P22V:** replacement handwheels with M30 x 1.5 mm connection, in grey, red or blue color, for PICV

Giacomini S.p.A.
Via per Alzo 39, 28017 San Maurizio d'Opaglio (NO) Italy
consulenza.prodotti@giacomini.com
+39 0322 923372 - giacomini.com

Technical data

Main technical data
- Fluids: water, glycol-based solutions (max. 50% of glycol)
- Working temperature range: 5÷120 °C
- Ambient temperature: 1÷50 °C
- Max working pressure: 25 bar
- Flow rate setting range (based on PICV setting): see "Versions and product codes" table
- Max differential pressure at PICV ends: see "Versions and product codes" table
- Filtering capacity: 500 µm
- Venturi flow meter Kv: see "Versions and product codes" table
- Actuator connection: M30 x 1,5 mm

Materials
- Main components:
  - R280KCY000/001/002/003: CW617N - EN 12165 brass
  - R280KCY100/101/102/103: CW602N - EN 12165 DZR brass
- PICV body: CW602N - EN 12165 DZR brass
- Ball valve gaskets: PTFE
- Gaskets of other components: EPDM
- Filter mesh: AISI 304 stainless steel
- Insulation:
  - R280KCY000/001/002/100/101/102: expanded PPR
  - R280KCY003/103: expanded PE

Components

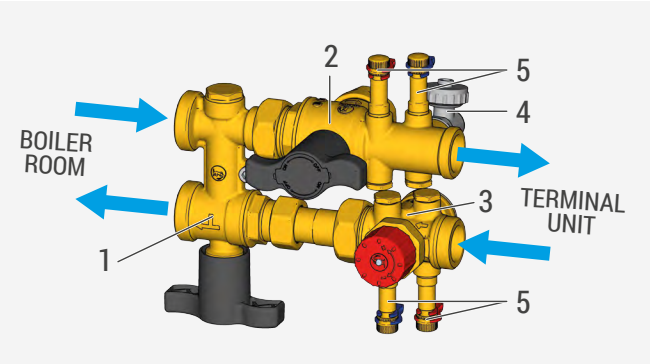

1	Diverting ball valve for kit bypass
2	Ball valve with integrated filter
3	Pressure independent control valve (PICV)
4	Drain cock
5	Probe holder

Diverting ball valve (Ref.1)
The diverting ball valve provides a bypassing function thanks to the special shape of its ball.
The two ball vaves included in the kit are full port, to limit the pressure loss.

Ball valve with integrated filter (Ref. 2)
The valve includes a filter inside its ball. Close the valve to remove the filter without draining the system (see "Maintenance").
The filter features a 500 µm filtering capacity while the valve is a full-port model (DN25) that guarantees the highest flow rate.

Pressure independent control valve (PICV) (Ref. 3)
The PICV provides top-notch energy efficiency and state-of-the-art control of the flow rate.
It is a 3-in-1 valve (DPCV, balancing and control) for quick and convenient commissioning with no setting design required by the planner.
The PICV can be controlled automatically through a proportional actuator (0...10 V) to set the flow rate within the working range defined by the cartridge calibration, or through an ON-OFF actuator to shut off the circuit.
These two control options enable the PICV to perfectly adapt itself to the type of control required by the system.

Hydraulic diagram

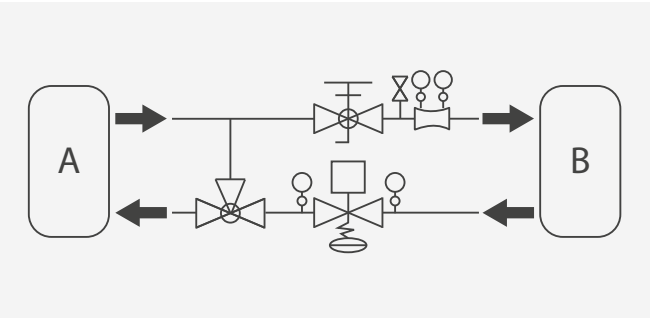

	Diverting ball valve for kit bypass
	Ball valve with integrated filter
	Probe holder
	Pressure independent control valve (PICV)
	Venturi flow meters
	Drain cock
A	Boiler room
B	Terminal unit (fan coil)

Installation

The R280KC kit is provided fully preassembled inside the insulation shell.
The kit must be installed upstream of the terminal unit (fan coil) and it includes the main components required for state-of-the-art operation.
It can be installed in any direction, yet the ball valve with integrated filter and the PICV with its actuator cannot be installed upside down.

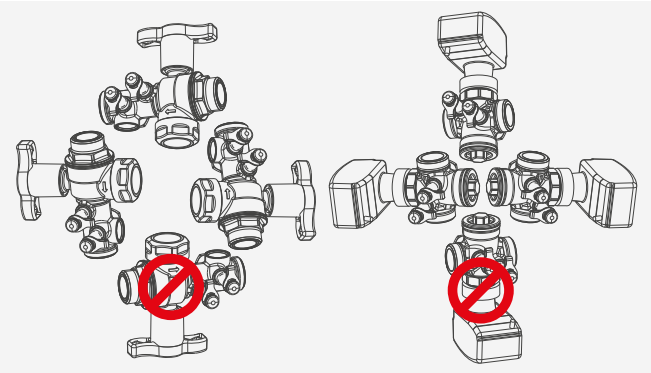

Reversibility of supply and return circuit

NOTE. All kits are reversible except for the R280KCY003/103 kits, which are not reversible.

The position of the supply and return circuits can be reversed to meet the system requirements.

1) Default configuration: supply on top and return on bottom.
2) Remove the kit from the insulation shell.
3) Loosen nuts **(B)** and **(F)**, then remove the PICV **(C)** and the valve with integrated filter **(G)** from the assembly.
Turn the diverting valve **(A)** by 180°.
Reassemble the PICV **(C)** and the valve with integrated filter **(G)** reversing their position while making sure to invert the installation position of both pressure ports **(D)** and **(I)**, caps **(E) and (H)**, and then turn the drain cock **(L)** by 180°.
Turn the two insulation shells upside down. The front shell will become the back shell and vice versa.
Reassemble the closing caps of insulation shells **(M)**, **(N)**, **(O)**, **(P)** and **(Q)** in the corresponding new positions.
4) Replace the kit in the insulation shell.
5) New configuration: supply on the bottom and return on the top.

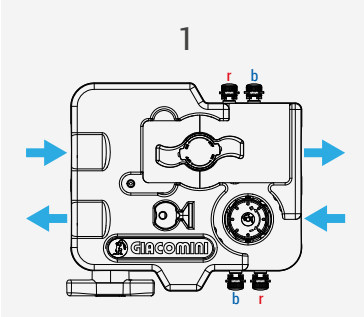

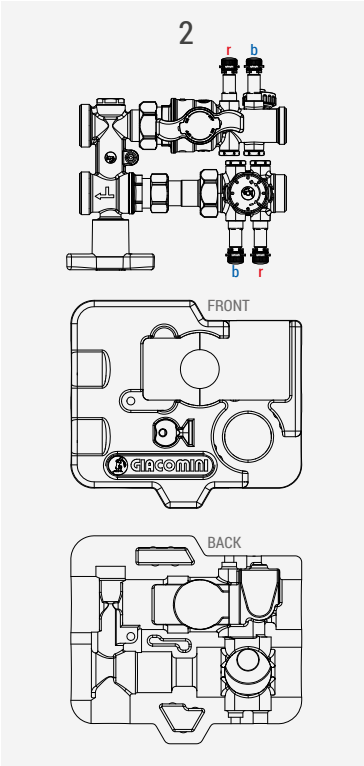

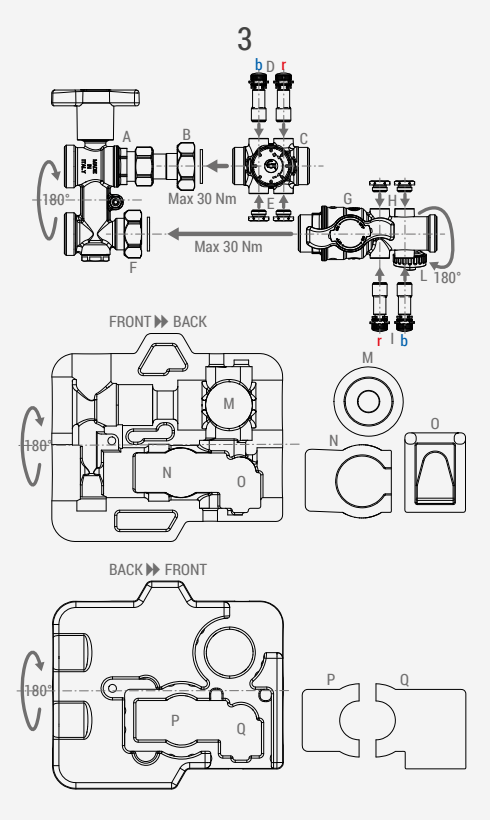

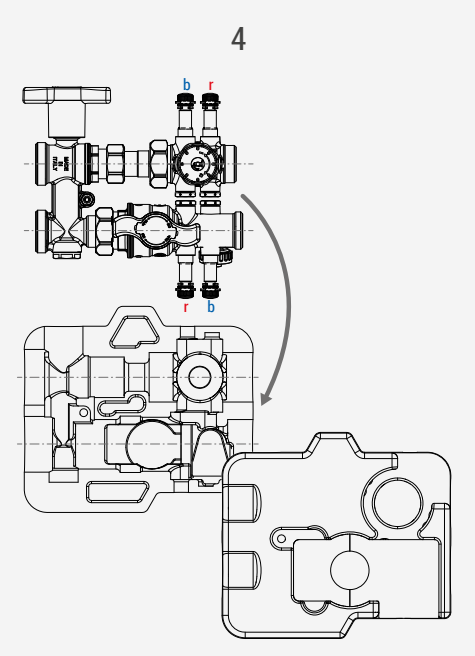

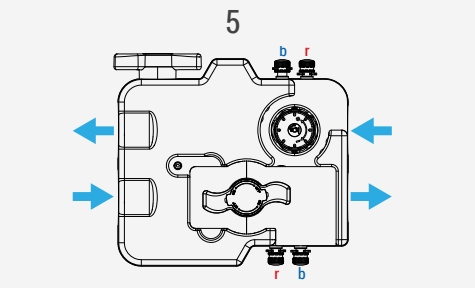

TUTORIAL

Giacomini S.p.A.
Via per Alzo 39, 28017 San Maurizio d'Opaglio (NO) Italy
consulenza.prodotti@giacomini.com
+39 0322 923372 - giacomini.com

Fan coil for floor installation

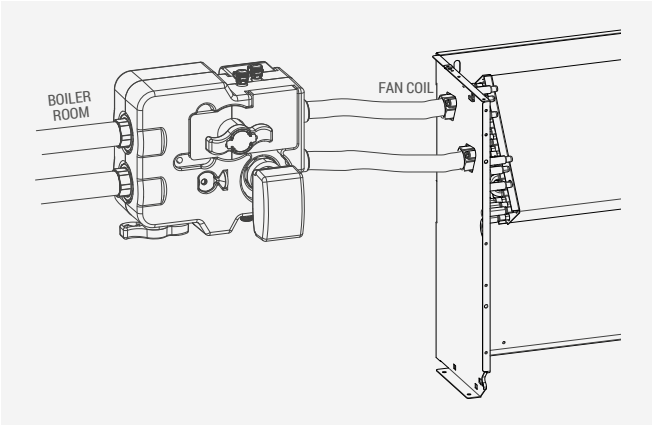

Fan coil for ceiling or trench heater installation

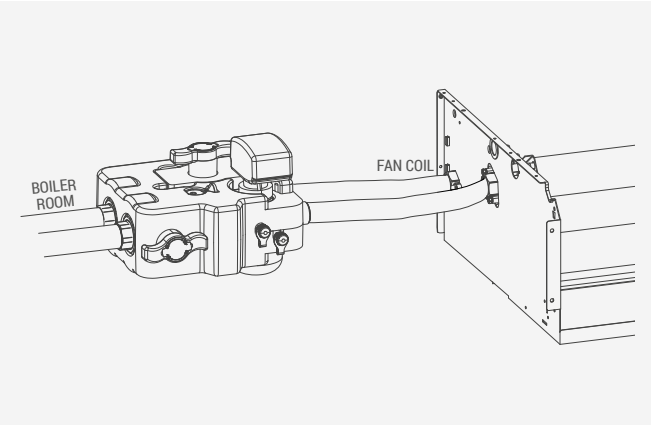

Operation

The R280KC kit provides the following operations:

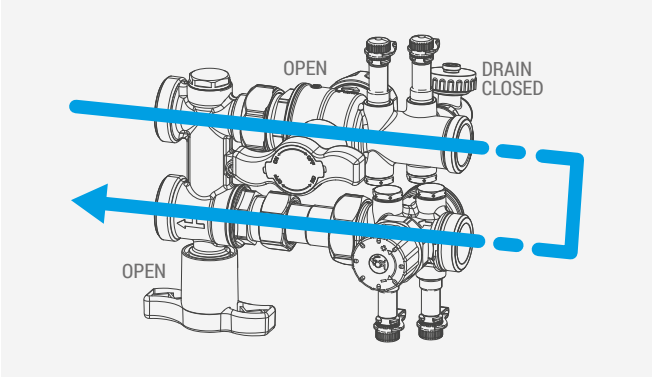

1) Normal operation
All ball valves open (Components - Ref.1 and 2) and drain cock closed (Components - Ref.4).

⚠ **WARING.** During normal operation make sure the drain cock is closed with its cap on.

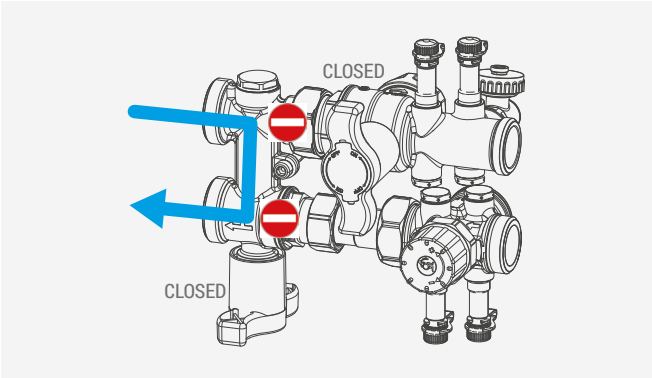

2) System flushing / Maintenance
The fan coil can be completely isolated to flush the system by closing the two ball valves (Components - Ref.1 and 2). This will prevent debris from entering the fan coil and the PICV (Components - Ref.3).

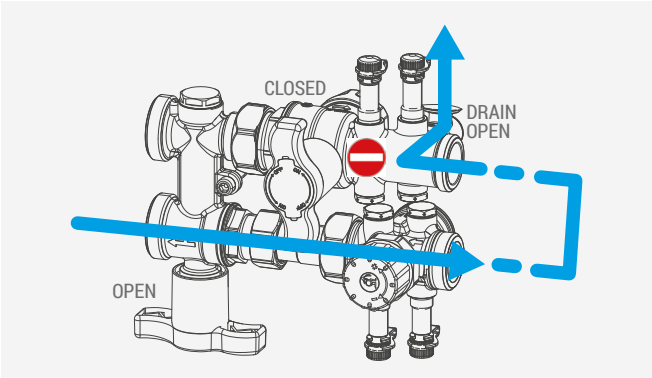

3) Fan coil flushing with reversed flow
Return ball valve open (Components - Ref.1), supply ball valve with integrated filter closed (Components - Ref.2) and drain cock open (Components - Ref.4).

HOW IT WORKS

NOTE. Flushing and maintenance operations comply with the BG 29/2021 (BSRIA) guidelines.

Giacomini S.p.A.
Via per Alzo 39, 28017 San Maurizio d'Opaglio (NO) Italy
consulenza.prodotti@giacomini.com
+39 0322 923372 - giacomini.com

Commissioning

Presetting of max flow rate, PICV

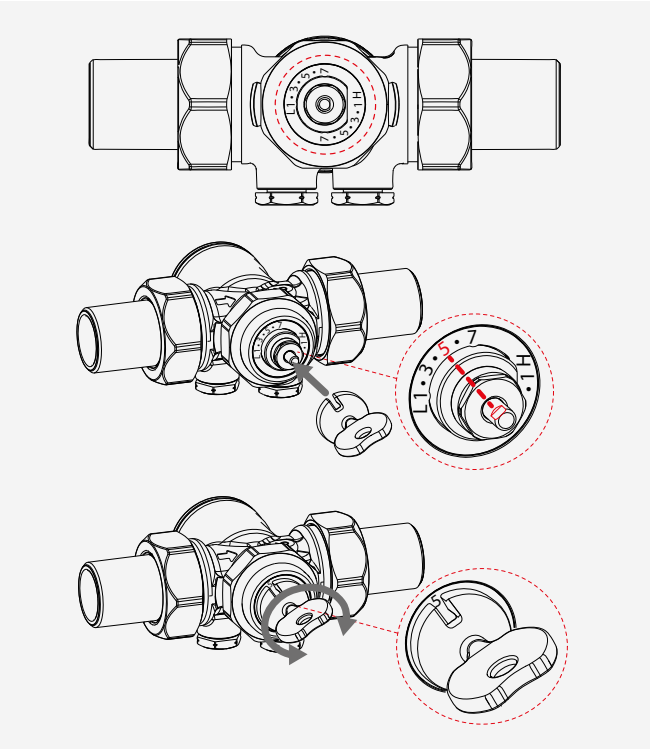

The pressure independent control valve (PICV) (Components - Ref.3) is equipped with a dual-scale flow rate setting:

- **L (LOW):** for low flow rates
- **H (HIGH):** for high flow rates

To set the valve to the required flow rate, turn the valve stem clockwise or counterclockwise using the **R73PY010 key** (included with the kit) till reaching the corresponding value printed on the bonnet plastic disk (refer to the table below to identify it.)

Change over from one setting scale to the other can be implemented at any time, even when the system is on; this enables to select the required max flow rate without replacing the valve.

The dual scale guarantees a more accurate regulation as the controlled flow rate range is narrowed down and does not require the use of cartridges with different characteristics.

PRODUCT CODE	WORKING DIFFERENTIAL PRESSURE RANGE [kPa]	
	WITH R473/R473HE THERMO-ELECTRIC ACTUATOR	WITH K281/K281-1 ACTUATOR OR NO ACTUATOR
R280KCY000 R280KCY100	25÷400	25÷800
R280KCY001 R280KCY101	25÷400	25÷800
R280KCY002 R280KCY102	25÷400	25÷800
R280KCY003 R280KCY103	N/A	25÷400

WORKING FLOW RATE RANGE [l/h]										
SETTING SCALE	MIN	1	2	3	4	5	6	7	8	9
SINGLE	35	95	120	230	310	400	460	520	-	-
L (LOW)	-	150	175	200	250	300	340	380	-	-
H (HIGH)	-	180	250	350	440	500	570	630	-	-
L (LOW)	-	290	400	500	640	730	900	1000	-	-
H (HIGH)	-	860	900	940	1110	1270	1330	1500	-	-
SINGLE	-	600	1000	1200	1600	2000	2300	2800	3100	3500

System flushing

Prior to commissioning, the system must be flushed according to the indications described in "Operation".

System commissioning

Fully open the shut-off valves and start up the hydraulic system.

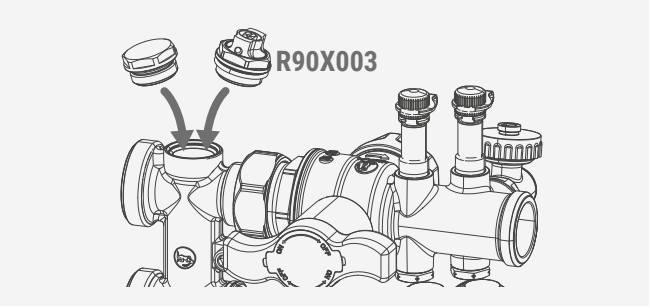

⚠ WARNING.

Install an air vent valve on the system circuit to release the air after servicing and cleaning the components.

R90 air vent valve can be installed in place of the plug on the diverter valve (except for R280KCY003/103).

Reading the differential pressure and flow rate

Reading of the terminal unit differential pressure

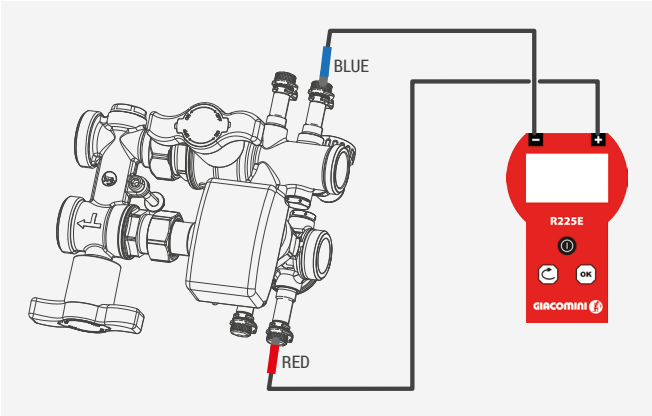

The differential pressure range and the water flow rate inside the kit can be read through the probe holders, their probes and the R225E differential pressure gauge.

Reading of the PICV differential pressure

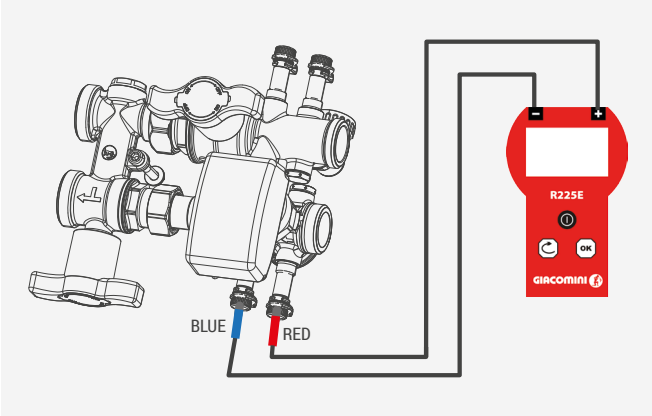

Reading of the differential pressure/flow rate through the Venturi flow meter

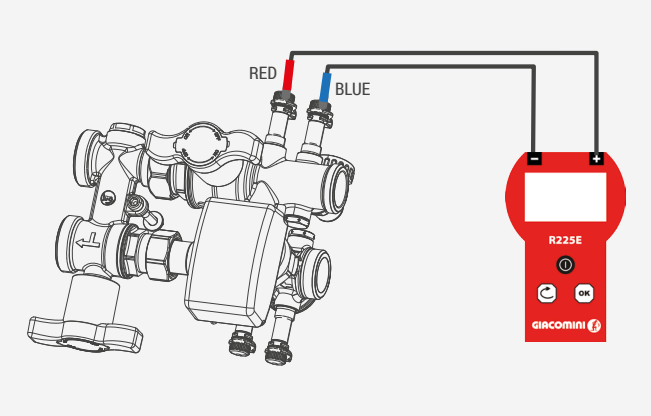

Giacomini S.p.A.
Via per Alzo 39, 28017 San Maurizio d'Opaglio (NO) Italy
consulenza.prodotti@giacomini.com
+39 0322 923372 - giacomini.com

Actuators installation and electrical connections

Actuators installation

Two different types of actuators can be installed to automize the pressure independent control valve (PICV).
Install the K281/K281-1 actuators by screwing the ring nut on the M30 x 1,5 mm threaded connection of the valve body.
Install the R473 thermo-electric actuators with Clip Clap connection on the threaded connection of the valve body after having assembled the R453FY002 adaptor ring nut (to be ordered separately).
The R473HE thermo-electric actuators with M30 x 1,5 mm connection are installed directly on the threaded connection of the valve body.

	PRODUCT CODE	POWER SUPPLY [V]	TYPE
	K281X022	24	ON/OFF
	K281X062	24	0...10 V
	K281X063	24	0...10 V
	R473X221	230	ON/OFF
	R473X222	24	ON/OFF
	R473HEX001	230	ON/OFF

K281X022 electric connections

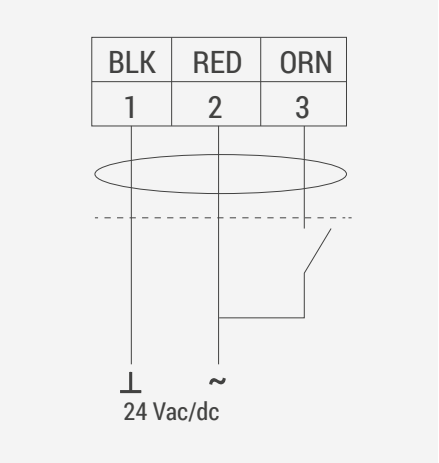

CONNECTION COLOR	FUNCTION
Black (BLK)	Common (-)
Red (RED)	Phase (+)
Orange (ORN)	Control

K281X062 electric connections

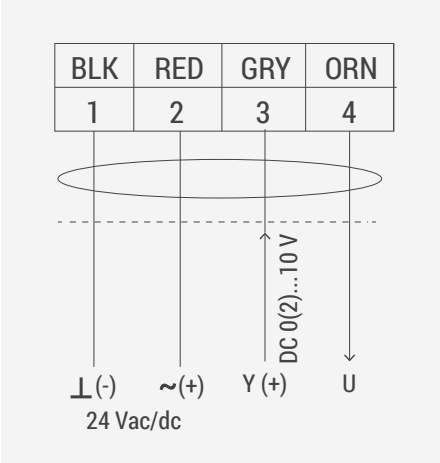

CONNECTION COLOR	FUNCTION
Black (BLK)	Common (-)
Red (RED)	Phase (+)
Grey (GRY)	Control signal
Orange (ORN)	Feedback signal

K281X063 electric connections

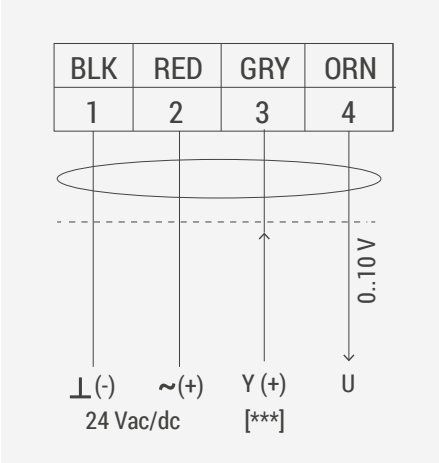

CONNECTION COLOR	FUNCTION
Black (BLK)	Common (-)
Red (RED)	Phase (+)
Grey (GRY)	Control signal 0..10 Vdc
Orange (ORN)	Feedback signal

R473X221, R473X222, R473HEX001 electric connections

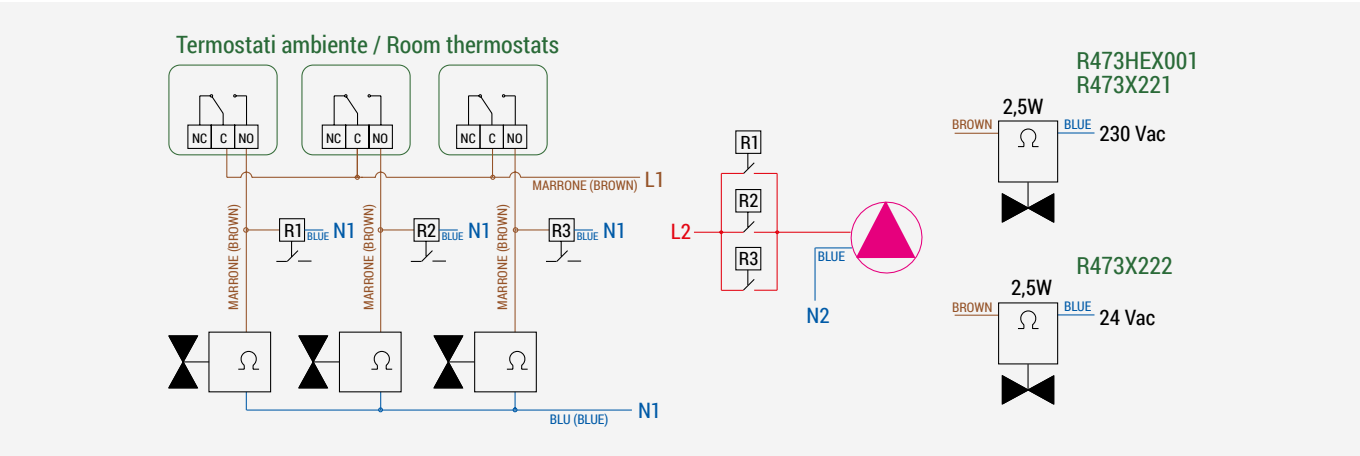

Giacomini S.p.A.
Via per Alzo 39, 28017 San Maurizio d'Opaglio (NO) Italy
consulenza.prodotti@giacomini.com
+39 0322 923372 - giacomini.com

Maintenance

Check the kit at least once a year upon seasonal change over from heating to cooling.
During inspection, check the components below:
- Ball valve filter: rinse under running water (see "Cleaning the filter".)
- Actuator: check its operation; should it fail to work with proper wiring, replace the actuator.
- Ball valves: check operations of the ball valves.

NOTE. For periodical maintenance, also refer to the local standards.

Cleaning the filter

1) Close the ball valve with integrated filter (Components - Ref.2).
2) Loosen the octagonal cap of the ball valve with integrated filter using a 30-mm wrench.
3) Remove the filter and rinse it under running water.
4) Re-insert the filter inside the valve making sure the filter hole **(A)** points in the opposite direction of the flow (shown by an arrow on the valve body) **(B)**.
5) Tighten the octagonal cap (max torque 10 Nm), open the ball valve and resume regular operation of the system.

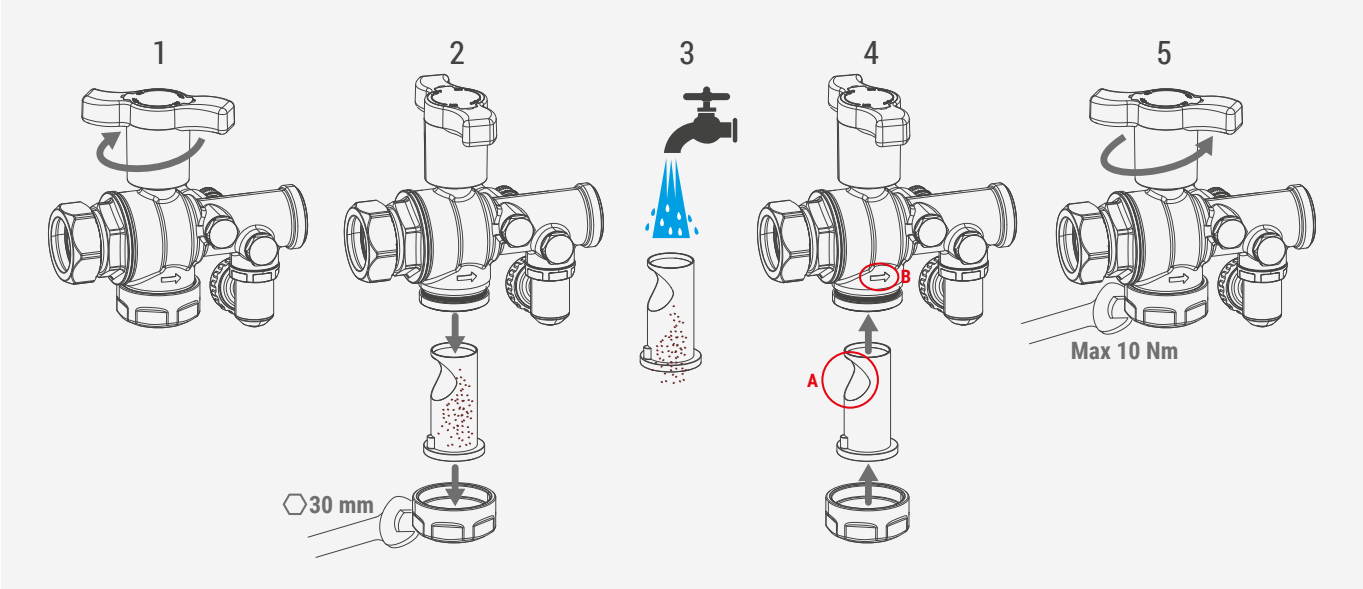

Dimensions

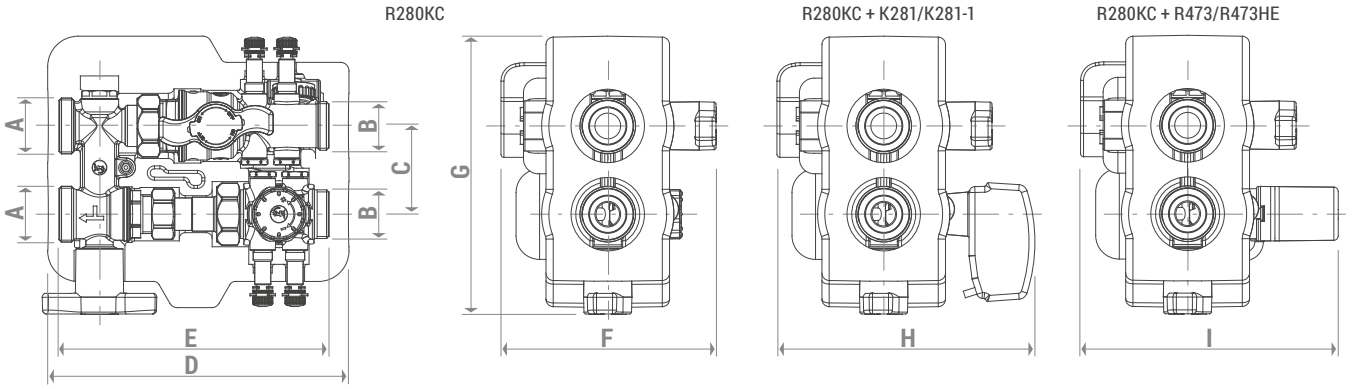

PRODUCT CODE	CONNECTIONS A x B	C [mm]	D [mm]	E [mm]	F [mm]	G [mm]	H [mm]	I [mm]
R280KCY000 R280KCY100								
R280KCY001 R280KCY101	1-1/2"UNS-M x G 1"M	60	205	184	147	190	176	175
R280KCY002 R280KCY102								
R280KCY003 R280KCY103	G 1-1/2"M x G 1"M	80	314	265	140	212	178	N/A

Product specifications

R280KCY000

Preassembled compact kit, "Premium" version, for connection and control of heating and cooling system terminal units. Pressure independent control valve (PICV), shut-off ball valves with integrated filter, diverting ball valve, drain cock and pressure ports with cap included. 1-1/2"UNS-M x G 1"M connections, DN15. Connection center distance: 60 mm. Range for flow rate setting: 35÷520 l/h. Max working pressure: 25 bar. Nominal Δp working range (PICV): 25÷400 kPa with R473/R473HE actuator; 25÷800 kPa with K281/K281-1 actuator or no actuator. Working temperature range 5÷120 °C. Ambient temperature range 1÷50 °C. Filtering capacity: 500 µm. Venturi flow meter Kv: 0,4. Actuator connection M30 x 1,5 mm. Fluids: water, glycol-based solutions (max 50% of glycol.) Main components: CW617N - EN 12165 brass. PICV body: CW602N - EN 12165 DZR brass. PTFE ball valve gaskets. Gaskets of other components in EPDM. AISI 304 stainless steel filter. Expanded PPR insulation.

R280KCY001

Preassembled compact kit, "Premium" version, for connection and control of heating and cooling system terminal units. Pressure independent control valve (PICV), shut-off ball valves with integrated filter, diverting ball valve, drain cock and pressure ports with cap included. 1-1/2"UNS-M x G 1"M connections, DN15. Connection center distance: 60 mm. Dual range for flow rate setting: 150÷380 l/h; 180÷630 l/h. Max working pressure: 25 bar. Nominal Δp working range (PICV): 25÷400 kPa with R473//R473HE actuator; 25÷800 kPa with K281/K281-1 actuator or no actuator. Working temperature range 5÷120 °C. Ambient temperature range 1÷50 °C. Filtering capacity: 500 µm. Venturi flow meter Kv: 1,9. Actuator connection M30 x 1,5 mm. Fluids: water, glycol-based solutions (max 50% of glycol.) Main components: CW617N - EN 12165 brass. PICV body: CW602N - EN 12165 DZR brass. PTFE ball valve gaskets. Gaskets of other components in EPDM. AISI 304 stainless steel filter. Expanded PPR insulation.

R280KCY002

Preassembled compact kit, "Premium" version, for connection and control of heating and cooling system terminal units. Pressure independent control valve (PICV), shut-off ball valves with integrated filter, diverting ball valve, drain cock and pressure ports with cap included. 1-1/2"UNS-M x G 1"M connections, DN20. Connection center distance: 60 mm. Dual range for flow rate setting: 290÷1000 l/h; 860÷1500 l/h. Max working pressure: 25 bar. Nominal Δp working range (PICV): 25÷400 kPa with R473//R473HE actuator; 25÷800 kPa with K281/K281-1 actuator or no actuator. Working temperature range 5÷120 °C. Ambient temperature range 1÷50 °C. Filtering capacity: 500 µm. Venturi flow meter Kv: 4,5. Actuator connection M30 x 1,5 mm. Fluids: water, glycol-based solutions (max 50% of glycol.) Main components: CW617N - EN 12165 brass. PICV body: CW602N - EN 12165 DZR brass. PTFE ball valve gaskets. Gaskets of other components in EPDM. AISI 304 stainless steel filter. Expanded PPR insulation.

R280KCY003

Preassembled compact kit, "Premium" version, for connection and control of heating and cooling system terminal units. Pressure independent control valve (PICV), shut-off ball valves with integrated filter, diverting ball valve, drain cock and pressure ports with cap included. G 1-1/2"M x G 1"M connections, DN25. Connection center distance: 80 mm. Flow rate setting range: 600÷3500 l/h. Max working pressure: 25 bar. Nominal Δp working range (PICV): 25÷400 kPa with K281/K281-1 actuator or no actuator. Working temperature range 5÷120 °C. Ambient temperature range 1÷50 °C. Filtering capacity: 500 µm. Venturi flow meter Kv: 9,0. Actuator connection M30 x 1,5 mm. Fluids: water, glycol-based solutions (max 50% of glycol.) Main components: CW617N - EN 12165 brass. PICV body: CW602N - EN 12165 DZR brass. PTFE ball valve gaskets. Gaskets of other components in EPDM. AISI 304 stainless steel filter. Expanded PE insulation.

Giacomini S.p.A.
Via per Alzo 39, 28017 San Maurizio d'Opaglio (NO) Italy
consulenza.prodotti@giacomini.com
+39 0322 923372 - giacomini.com

R280KCY100

Preassembled compact kit, "Premium" version, for connection and control of heating and cooling system terminal units. Pressure independent control valve (PICV), shut-off ball valves with integrated filter, diverting ball valve, drain cock and pressure ports with cap included. 1-1/2"UNS-M x G 1"M connections, DN15. Connection center distance: 60 mm. Range for flow rate setting: 35÷520 l/h. Max working pressure: 25 bar. Nominal Δp working range (PICV): 25÷400 kPa with R473/R473HE actuator; 25÷800 kPa with K281/K281-1 actuator or no actuator. Working temperature range 5÷120 °C. Ambient temperature range 1÷50 °C. Filtering capacity: 500 µm. Venturi flow meter Kv: 0,4. Actuator connection M30 x 1,5 mm. Fluids: water, glycol-based solutions (max 50% of glycol.) Main components: CW602N - EN 12165 DZR brass. PICV body: CW602N - EN 12165 DZR brass. PTFE ball valve gaskets. Gaskets of other components in EPDM. AISI 304 stainless steel filter. Expanded PPR insulation.

R280KCY101

Preassembled compact kit, "Premium" version, for connection and control of heating and cooling system terminal units. Pressure independent control valve (PICV), shut-off ball valves with integrated filter, diverting ball valve, drain cock and pressure ports with cap included. 1-1/2"UNS-M x G 1"M connections, DN15. Connection center distance: 60 mm. Dual range for flow rate setting: 150÷380 l/h; 180÷630 l/h. Max working pressure: 25 bar. Nominal Δp working range (PICV): 25÷400 kPa with R473//R473HE actuator; 25÷800 kPa with K281/K281-1 actuator or no actuator. Working temperature range 5÷120 °C. Ambient temperature range 1÷50 °C. Filtering capacity: 500 µm. Venturi flow meter Kv: 1,9. Actuator connection M30 x 1,5 mm. Fluids: water, glycol-based solutions (max 50% of glycol.) Main components: CW602N - EN 12165 DZR brass. PICV body: CW602N - EN 12165 DZR brass. PTFE ball valve gaskets. Gaskets of other components in EPDM. AISI 304 stainless steel filter. Expanded PPR insulation.

R280KCY102

Preassembled compact kit, "Premium" version, for connection and control of heating and cooling system terminal units. Pressure independent control valve (PICV), shut-off ball valves with integrated filter, diverting ball valve, drain cock and pressure ports with cap included. 1-1/2"UNS-M x G 1"M connections, DN20. Connection center distance: 60 mm. Dual range for flow rate setting: 290÷1000 l/h; 860÷1500 l/h. Max working pressure: 25 bar. Nominal Δp working range (PICV): 25÷400 kPa with R473//R473HE actuator; 25÷800 kPa with K281/K281-1 actuator or no actuator. Working temperature range 5÷120 °C. Ambient temperature range 1÷50 °C. Filtering capacity: 500 µm. Venturi flow meter Kv: 4,5. Actuator connection M30 x 1,5 mm. Fluids: water, glycol-based solutions (max 50% of glycol.) Main components: CW602N - EN 12165 DZR brass. PICV body: CW602N - EN 12165 DZR brass. PTFE ball valve gaskets. Gaskets of other components in EPDM. AISI 304 stainless steel filter. Expanded PPR insulation.

R280KCY103

Preassembled compact kit, "Premium" version, for connection and control of heating and cooling system terminal units. Pressure independent control valve (PICV), shut-off ball valves with integrated filter, diverting ball valve, drain cock and pressure ports with cap included. G 1-1/2"M x G 1"M connections, DN25. Connection center distance: 80 mm. Flow rate setting range: 600÷3500 l/h. Max working pressure: 25 bar. Nominal Δp working range (PICV): 25÷400 kPa with K281/K281-1 actuator or no actuator. Working temperature range 5÷120 °C. Ambient temperature range 1÷50 °C. Filtering capacity: 500 µm. Venturi flow meter Kv: 9,0. Actuator connection M30 x 1,5 mm. Fluids: water, glycol-based solutions (max 50% of glycol.) Main components: CW602N - EN 12165 DZR brass. PICV body: CW602N - EN 12165 DZR brass. PTFE ball valve gaskets. Gaskets of other components in EPDM. AISI 304 stainless steel filter. Expanded PE insulation.

Safety Warning. Installation, commissioning and periodical maintenance of the product must be carried out by qualified operators in compliance with national regulations and/or local standards. A qualified installer must take all required measures, including use of Individual Protection Devices, for his and others' safety. An improper installation may damage people, animals or objects towards which Giacomini S.p.A. may not be held liable.

Package Disposal. Carton boxes: paper recycling. Plastic bags and bubble wrap: plastic recycling.

Additional information. For more information, go to giacomini.com or contact our technical assistance service. This document provides only general indications. Giacomini S.p.A. may change at any time, without notice and for technical or commercial reasons, the items included herewith. The information included in this technical sheet do not exempt the user from strictly complying with the rules and good practice standards in force.

Product Disposal. Do not dispose of product as municipal waste at the end of its life cycle. Dispose of product at a special recycling platform managed by local authorities or at retailers providing this type of service.

Giacomini S.p.A.
Via per Alzo 39, 28017 San Maurizio d'Opaglio (NO) Italy
consulenza.prodotti@giacomini.com
+39 0322 923372 - giacomini.com