R274C

Compact 6-way zone valve

Radiant Systems

Energy Management

Datasheet
0980EN 11/2025

PATENTED

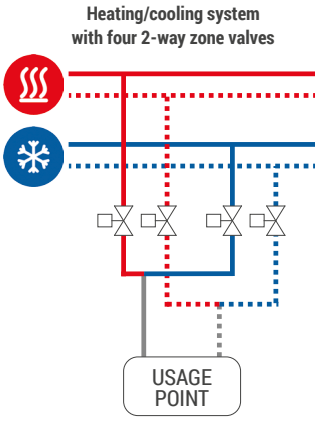

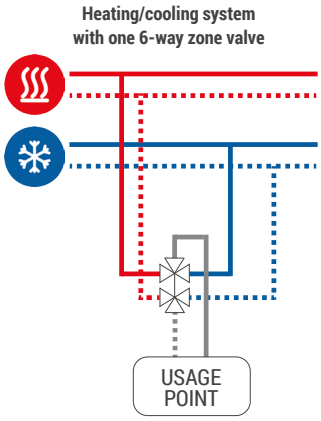

The R274C compact 6-way zone valve can control the water supply from two different thermal energy sources to a single usage point; in other words it controls 4-pipe systems (typically heating and cooling) in a simple way.
One 6-way valve, motorized with its actuator, can therefore replace four motorized 2-way zone valves with no need to synchronize them to open/close the two sources.
6-way zone valve enables changeover (0° and 90° stem positions) and also to simultaneously shut off both sources (45° stem position).
R274C 6-way valves are generally installed in radiant ceiling and fan coil systems where the user can easily changeover from heating to cooling also during the same day and autonomously for each zone.
The 40 mm center distance between inlet and outlet provides direct connection to the fan coils.

Versions and product codes

PRODUCT CODE	CONNECTIONS	OPTIONALS			
		CALIBRATED WASHERS P21S	ACTUATOR K274-2	INSULATION R274W	FITTINGS 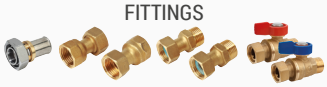
R274CY003	G 1/2"M	P21SY001÷P21SY006	K274Y072	R274WY102	RM179Y053 (1/2"F x 16x2) RM179Y056 (1/2"F x 20x2) P15FY013* (G 1/2"F x G 1/2"F) P15Y018* (G 1/2"F x G 1/2"M) R254PY102 (1/2"M x 1/2"F Nut) red R254PY112 (1/2"M x 1/2"F Nut) blue

* Supplied in pairs of tail pieces

GIACOMINI WATER E-MOTION

Giacomini S.p.A.
Via per Alzo 39, 28017 San Maurizio d'Opaglio (NO) Italy
consulenza.prodotti@giacomini.com
+39 0322 923372 - giacomini.com

Main features

- Special built-in cartridge for top-notch regulation precision (no backlashes) and ideal flow rate under any condition (best Kv on the market)
- Optional installation of P21S calibrated washers to achieve different Kvs
- Wide selection of tail pieces and fittings for easy connection to the system
- Overpressure protection system integrated in the cartridge
- Compact dimensions for installation in extremely limited spaces
- Possibility to install the valve on brackets using the female threaded holes (four M4 holes) on the bottom

Technical data

R274C 6-way zone valve
- Fluid working temperature range: 5÷90 °C
- Nominal pressure (PN): 16 bar
- Max. differential pressure: 2 bar
- Max percentage of glycol: 50 % (the glycol percentage must be the same for both circuits - heating and cooling)
- Leakage class (according to EN12266-1): A, no leakage
- Actuator connection: F04 - ISO 5211 integrated in valve body
- Control stem with female threaded hole M4
- Rotation angle: 90°

Materials
- Valve body: UNI EN 12165 CW617N brass
- Gaskets: EPDM
- Cartridge: PPSU

K274Y072 actuator (optional)
- Type of command: 2÷10 V
- Opening time: 60 s
- Maximum torque: 10 Nm
- Electric absorption: 4,5 VA, 5 W
- Insulation class: III
- Protection degree: IP54
- Room working temperature range: 0÷50 °C
- Room working humidity: 5÷95 % with non-condensing R.H.
- Electric cable length: 1 m (6 x 0,5 mm²)
- Possibility of manual control with maneuvering knob

P21S calibrated washers (optional)
Stainless steel calibrated washers and Seeger ring

R274W insulation (optional)
Insulation made of cross-linked polyethylene foam

Losses of pressure
Losses of pressure values of valve including delivery and return, with or without calibrated washers.

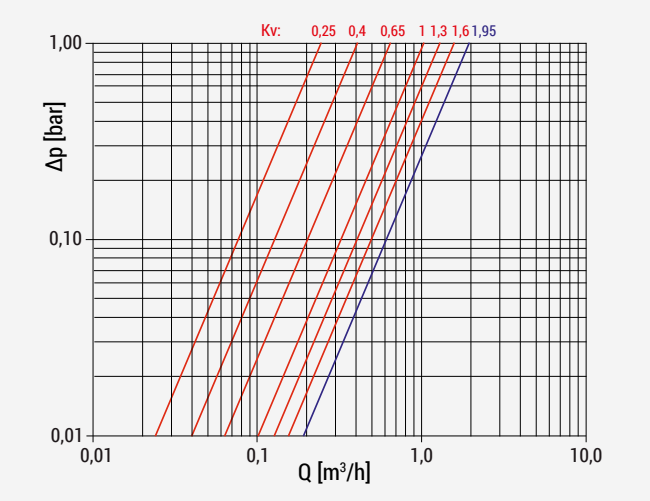

PRODUCT CODE	TOTAL Kv (VALVE DELIVERY AND RETURN + WASHER)
R274CY003 + P21SY001	0,25 (washer hole Ø 2,7 mm)
R274CY003 + P21SY002	0,40 (washer hole Ø 3,5 mm)
R274CY003 + P21SY003	0,65 (washer hole Ø 4,5 mm)
R274CY003 + P21SY004	1,00 (washer hole Ø 6,0 mm)
R274CY003 + P21SY005	1,30 (washer hole Ø 7,0 mm)
R274CY003 + P21SY006	1,60 (washer hole Ø 8,0 mm)
R274CY003 without P21S	1,95

⚠ **WARNING.** The valve is fit for use in walled and boiler rooms and works with non-aggressive fluids (water, glycol-based water complying with VDI 2035/ÖNORM 5195).

Giacomini S.p.A.
Via per Alzo 39, 28017 San Maurizio d'Opaglio (NO) Italy
consulenza.prodotti@giacomini.com
+39 0322 923372 - giacomini.com

Valve opening chart

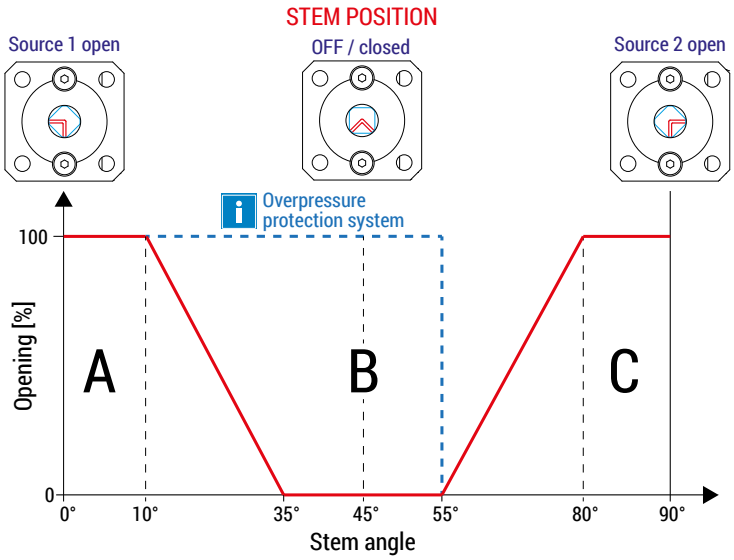

CHART REFERENCE	STEM ANGLE	OPENING PERCENTAGE	ACTION
A	0°÷10°	100 %	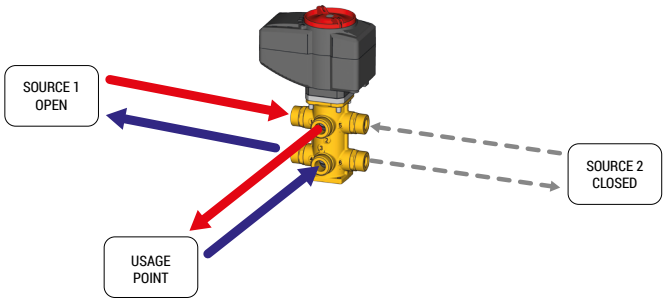
B	35°÷55°	0 %	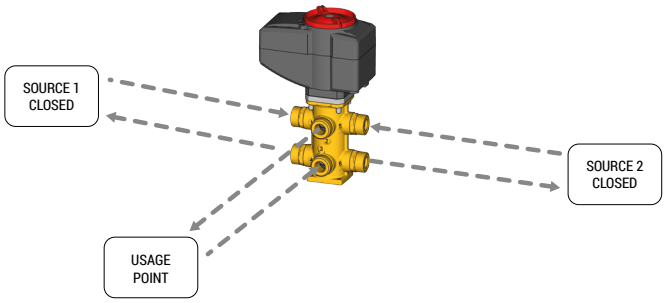
C	80°÷90°	100 %	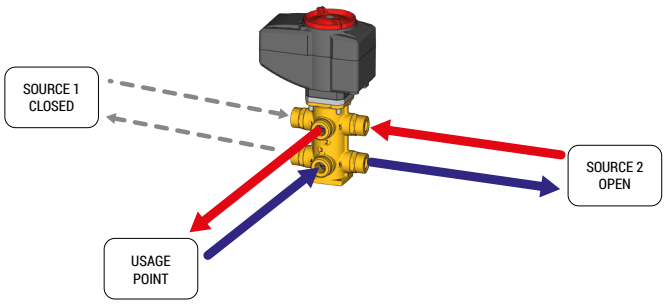

Giacomini S.p.A.
Via per Alzo 39, 28017 San Maurizio d'Opaglio (NO) Italy
consulenza.prodotti@giacomini.com
+39 0322 923372 - giacomini.com

Overpressure protection system

When using the 6-way valve with heating/cooling combined usage points (radiant ceilings, fan coils), the fluid inside the usage point circuit is completely isolated when the valve is closed (with no heating or cooling).
The pressure of the fluid inside the usage point circuit may therefore increase or decrease when the fluid temperature changes as a consequence of the room temperature.
The 6-way valve features an integrated overpressure protection to offset such pressure variations.
The cartridge in the top of the valve features a passage inside **(ref. A)** which keeps the "usage point" connected to "source 1" even when the valve is closed (45° stem position).
The combined action of these two parts (top and bottom) prevents the fluid from flowing when the valve is closed.
The overpressure protection system does not affect the hydraulic separation between the two circuits (source 1 and source 2): the two hydraulic sources are always separated.

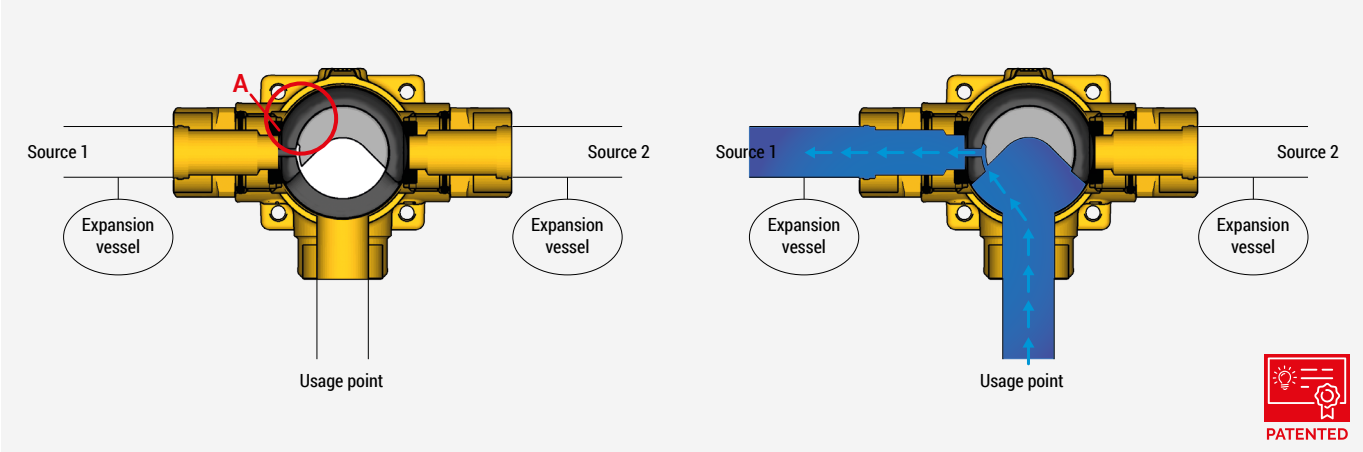

Components

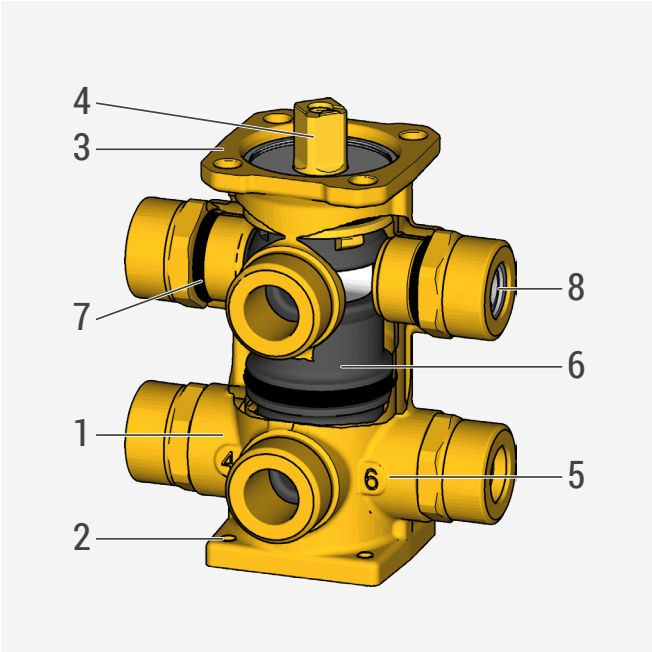

1	Valve body
2	M4 holes for valve fixing
3	F04 connection - ISO 5211 for actuator installation
4	Control stem with female threaded hole M4
5	Numerical markings of zone valve six ways
6	Built-in cartridge
7	Fitting with O-Ring
8	Calibrated washer with Seeger ring

Giacomini S.p.A.
Via per Alzo 39, 28017 San Maurizio d'Opaglio (NO) Italy
consulenza.prodotti@giacomini.com
+39 0322 923372 - giacomini.com

Installation

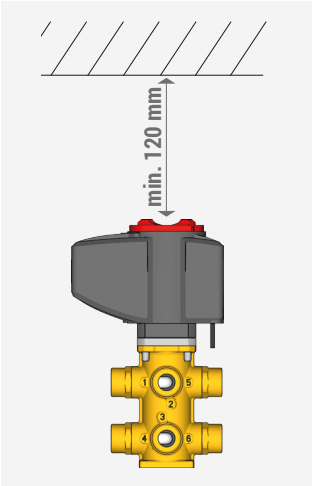

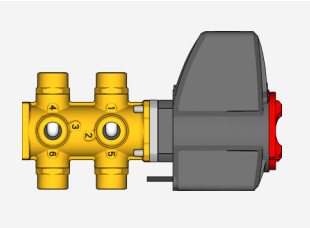

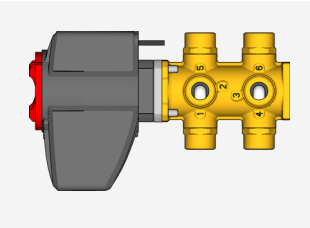

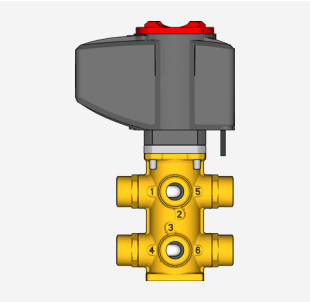

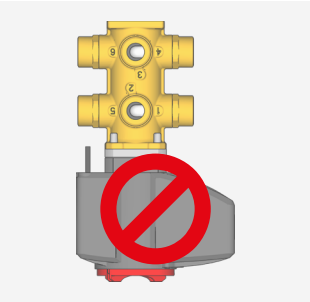

⚠ **WARNING.** The valve may be installed in any position but the actuator should not be positioned upside down or with the power cable entering from the top (to prevent problems deriving from condensation).

Installation on fan coil units

R274C 6-way valves are generally installed in radiant ceiling and fan coil systems where the user can easily changeover from heating to cooling, also during the same day and autonomously for each zone.
The 40 mm center distance between inlet and outlet provides direct connection to the fan coils.

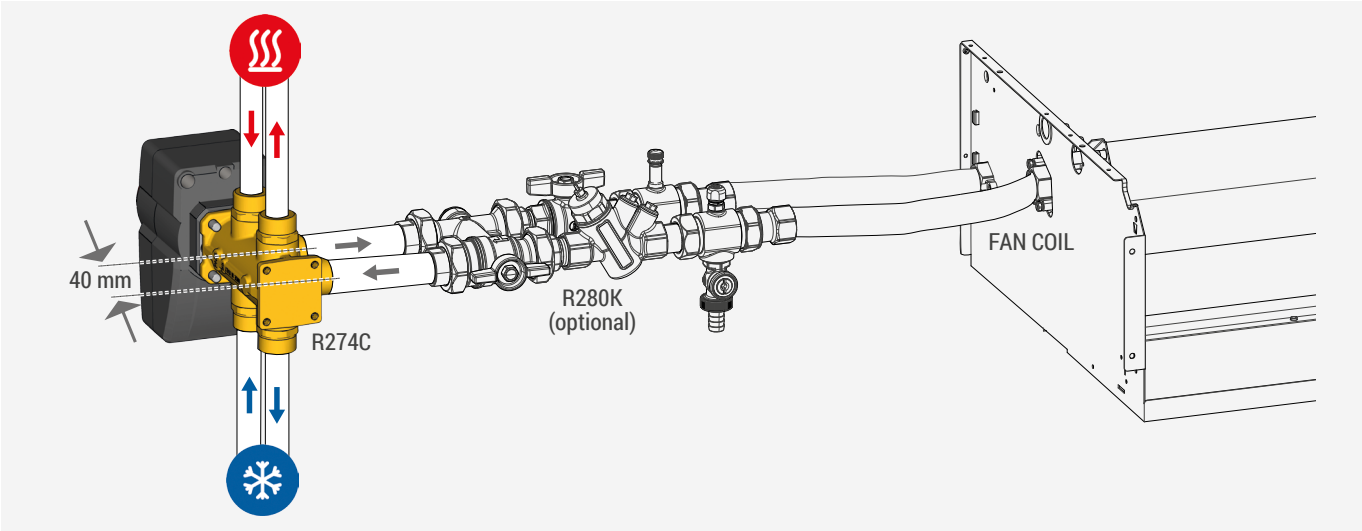

Installation of calibrated washers

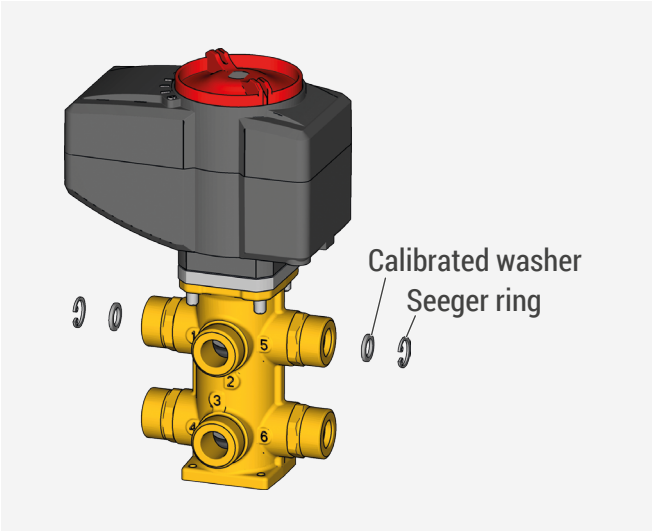

To install the washer, insert it manually inside the valve fitting and then block it by inserting the Seeger ring (included with the washer) using pliers when needed.

NOTE. The two calibrated washers balance the flow rate inside the two circuits (from source 1 to usage point; from source 2 to usage point).
The two circuits may require different Kv values and therefore calibrated washers with two different product codes may be used (see calibrated washer table on pag. 2).
The calibrated washers can be installed both on the delivery and return circuit.

Giacomini S.p.A.
Via per Alzo 39, 28017 San Maurizio d'Opaglio (NO) Italy
consulenza.prodotti@giacomini.com
+39 0322 923372 - giacomini.com

Maintenance

The valve requires no maintenance once installed, However periodical inspection is recommended to check regular operation of the actuator and the presence of possible hydraulic leaks.

Dimensions

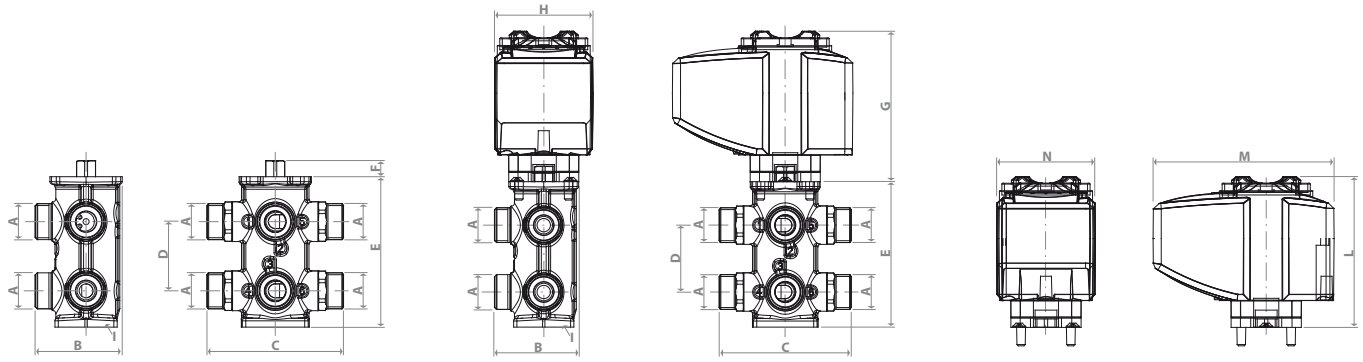

PRODUCT CODE	A	B [mm]	C [mm]	D [mm]	E [mm]	F [mm]	G [mm]	H [mm]	I	L [mm]	M [mm]	N [mm]
R274CY003	G 1/2"M	51	79	40	87	10	90	59	4 M4 holes	90	108	59

Product specifications

R274C

Compact 6-way zone valve. Center distance 40 mm. Equipped with overpressure protection system. CW617N brass body. EPDM gaskets. ISO 228 male threaded connections. Optional installation of calibrated washers to control the losses of pressure. Fluid working temperature range: 5÷90 °C. Nominal pressure: 16 bar. Max. differential pressure: 2 bar Max. percentage of glycol: 50 %.

UNIT OF MEASUREMENT.

1 bar = 100 kPa

1 m^3/h = 1000 l/h = 16,7 l/min = 0,28 l/s

Safety Warning. Installation, commissioning and periodical maintenance of the product must be carried out by qualified operators in compliance with national regulations and/or local standards. A qualified installer must take all required measures, including use of Individual Protection Devices, for his and others' safety. An improper installation may damage people, animals or objects towards which Giacomini S.p.A. may not be held liable.

Package Disposal. Carton boxes: paper recycling. Plastic bags and bubble wrap: plastic recycling.

Additional information. For more information, go to giacomini.com or contact our technical assistance service. This document provides only general indications. Giacomini S.p.A. may change at any time, without notice and for technical or commercial reasons, the items included herewith. The information included in this technical sheet do not exempt the user from strictly complying with the rules and good practice standards in force.

Product Disposal. Do not dispose of product as municipal waste at the end of its life cycle. Dispose of product at a special recycling platform managed by local authorities or at retailers providing this type of service.

Giacomini S.p.A.
Via per Alzo 39, 28017 San Maurizio d'Opaglio (NO) Italy
consulenza.prodotti@giacomini.com
+39 0322 923372 - giacomini.com