R274, R274N

6-way zone valves

Radiant Systems

Energy Management

Datasheet
0576EN 11/2025

R274

R274N

PATENTED

6-way zone valves, R274 (with tail pieces) and R274N (without tail pieces), to manage the water supply to a single usage point from two different sources of thermal energy, or to easily manage 4-pipe systems (typically used in heating and cooling applications).
A single valve, motorized with its actuator, can thus substitute four motorized two-way zone valves, easily resolving any complications with synchronization for the opening/closings of the two sources.
The 6-way zone valves allow the system change-over from heating to cooling (stem positions from 0° to 90°) and also the simultaneous closing of the supply from both sources (stem position at 45°).
R274 and R274N 6-way valves are generally installed in radiant ceiling and fan coil systems where the user can easily changeover from heating to cooling also during the same day and autonomously for each zone.

Heating and cooling with 4 two-way zone valves

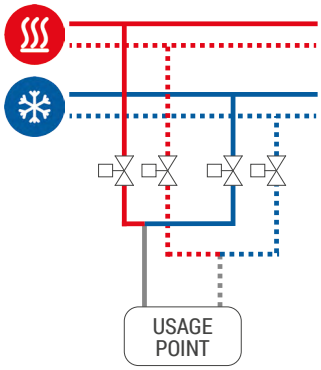

Heating and cooling with 1 six -way zone valve

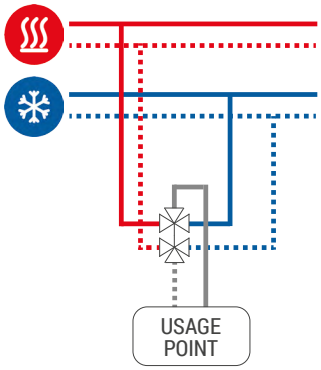

VIDEO
Frame the QR code with your smartphone or tablet to view the video tutorial.

Giacomini S.p.A.
Via per Alzo 39, 28017 San Maurizio d'Opaglio (NO) Italia
consulenza.prodotti@giacomini.com
+39 0322 923372 - giacomini.com

Versions and product codes

SERIES	PRODUCT CODES	VALVE CONNEC-TIONS	VALVE CONNECTIONS WITH FLAT SEAT TAIL PIECES	VALVE BODY MATERIAL	OPTIONAL			
					CALIBRATED WASHERS P21S	ACTUATOR K274-2	INSULATION R274W	FITTINGS 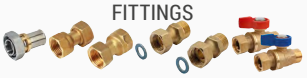
R274 (with tail pieces)	R274Y023	G 1"M	G 1/2"M	CW617N	P21SY011 ÷ P21SY016	K274Y072	R274WY001	-
	R274Y024	G 1"M	G 3/4"M	CW617N	P21SY011 ÷ P21SY018	K274Y072	R274WY001	
	R274Y025	G 1"M	G 1"M	CW617N	P21SY011 ÷ P21SY018	K274Y072	R274WY001	
R274N (witout tail pieces)	R274Y033	G 1/2"M	-	CW617N	P21SY001 ÷ P21SY006	K274Y072	R274WY002	RM179Y053 (1/2"F x 16x2) RM179Y056 (1/2"F x 20x2) P15FY013* (G 1/2"F x G 1/2"F) P15Y018* (G 1/2"F x G 1/2"M) R254PY102 (1/2"M x 1/2"F Nut) red R254PY112 (1/2"M x 1/2"F Nut) blue
	R274Y133	G 1/2"M	-	CW602N (DZR)	P21SY001 ÷ P21SY006	K274Y072	R274WY002	
	R274Y045	G 1"M	-	CW617N	P21SY011 ÷ P21SY018	K274Y072	R274WY001	RM179Y073 (1"F x 26x3) RM179Y074 (1"F x 32x3) RM252Y003 (1"F x RM16x2) RM252Y004 (1"F x RM20x2) R252Y023 (1"F x 1/2"M) R252Y025 (1"F x 18) P15Y015* (G 1"F x G 1/2"M) P15Y016* (G 1"F x G 3/4"M) P15Y017* (G 1"F x G 1"M) P15FY004* (G 1"F x Rp 3/4") P15FY005* (G 1"F x Rp 1")
	R274Y145	G 1"M	-	CW602N (DZR)	P21SY011 ÷ P21SY018	K274Y072	R274WY001	

* Supplied in pairs of tail pieces

Main features

- Possibility of using valve with flat seat tail pieces (R274 series) or without tail pieces (R274N series)
- Possibility to install the P21S calibrated washers to obtain different Kv.
- Wide range of tail pieces and fittings for a simple connection to the system.
- Easy actuator installation, with minimal space needed
- Actuator can be operated manually, which allows users to move the valve position even in the absence of electricity
- Overpressure protection system
- The valve can be secured to the supports using the threaded hole on the lower part of the valve:
  - no. 1 M6 hole for R274Y023, R274Y024, R275Y025, R274Y045, R274Y145
  - no. 2 M4 holes for R274Y033, R274Y133

Giacomini S.p.A.
Via per Alzo 39, 28017 San Maurizio d'Opaglio (NO) Italia
consulenza.prodotti@giacomini.com
+39 0322 923372 - giacomini.com

Technical data

6-way valves R274 and R274N

- Fluid working temperature range: 5÷90 °C
- Rated pressure (PN): 16 bar
- Maximum differential pressure: 2 bar
- Maximum glycol percentage: 50 % (the percentage of glycol must be equal for both circuits - heating and cooling)
- Leakage rate (according to EN12266-1): A, no leakage
- Connection for actuator: F04 - ISO 5211

Materials

- Valve body: brass CW617N or CW602N (DZR) depending on version
- Gaskets: low-friction PTFE / EPDM
- Connection for actuator: PA66-GF30

Actuator K274Y072 (optional)

- Type of command: 2÷10 V
- Opening time: 60 s
- Maximum torque: 10 Nm
- Electric absorption: 4,5 VA, 5 W
- Insulation class: III
- Protection degree: IP54
- Room working temperature range: 0÷50 °C
- Room working humidity: 5÷95 % with non-condensing R.H.
- Electric cable length: 1 m (6 x 0,5 mm²)
- Possibility of manual control with maneuvering knob

Calibrated washers P21S (optional)

Calibrated washers with seeger ring, made of stainless steel.

Losses of pressure

Loss of pressure values for valves R274Y033 and R274Y133 inclusive of delivery and return, with or without calibrated washers.

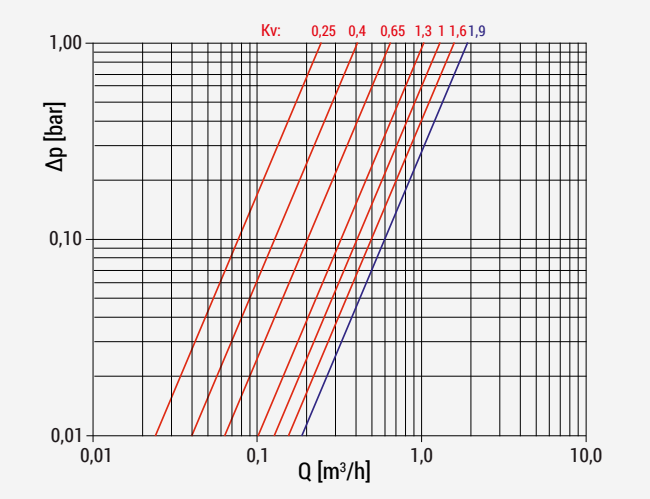

PRODUCT CODE	TOTAL Kv (VALVE DELIVERY AND RETURN + WASHER)
Valve + P21SY001	0,25 (washer hole Ø 2,7 mm)
Valve + P21SY002	0,40 (washer hole Ø 3,5 mm)
Valve + P21SY003	0,65 (washer hole Ø 4,5 mm)
Valve + P21SY004	1,00 (washer hole Ø 6,0 mm)
Valve + P21SY005	1,30 (washer hole Ø 7,0 mm)
Valve + P21SY006	1,60 (washer hole Ø 8,0 mm)
Valve without P21S	1,90

Loss of pressure values for valves R274Y045, R274Y145, R274Y023, R274Y024 and R274Y025 inclusive of delivery and return, with or without calibrated washers.

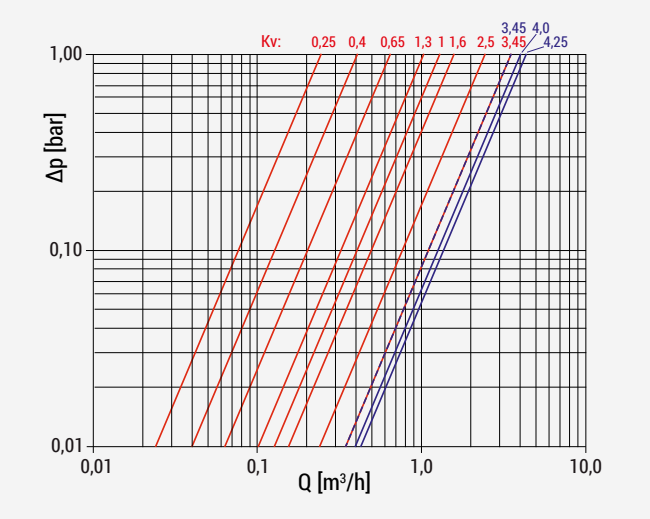

PRODUCT CODE	TOTAL Kv (VALVE DELIVERY AND RETURN + WASHER)
Valve + P21SY011	0,25 (washer hole Ø 3 mm)
Valve + P21SY012	0,40 (washer hole Ø 4 mm)
Valve + P21SY013	0,65 (washer hole Ø 4,5 mm)
Valve + P21SY014	1,00 (washer hole Ø 5,8 mm)
Valve + P21SY015	1,30 (washer hole Ø 6,7 mm)
Valve + P21SY016	1,60 (washer hole Ø 7,5 mm)
Valve + P21SY017	2,50 (washer hole Ø 9,0 mm)
Valve + P21SY018	3,45 (washer hole Ø 12,7 mm)
R274Y023 without P21S	3,45
R274Y024 without P21S	4,00
R274Y025/045/145 without P21S	4,25

⚠ **WARNING.** The valve is suitable for installation in indoor rooms and boiler rooms, and use with non-aggressive fluids (water, glycol-based water complying with VDI 2035/ÖNORM 5195).

Valve opening diagram

R274Y045, R274Y145, R274Y023, R274Y024, R274Y025 (1")

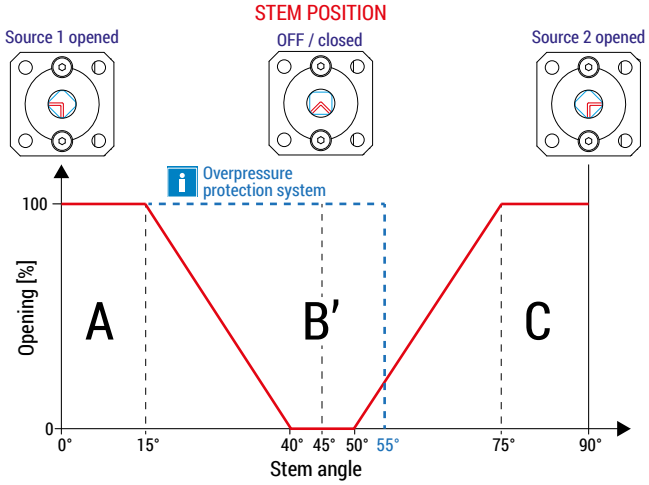

R274Y033, R274Y133 (1/2")

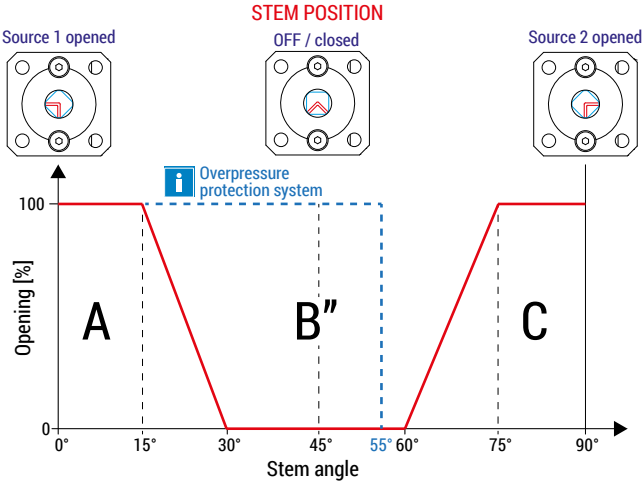

REFERENCE IN THE GRAPHIC	STEM ANGLE	OPENING PERCENTAGE	ACTION
A	0°÷15°	100 %	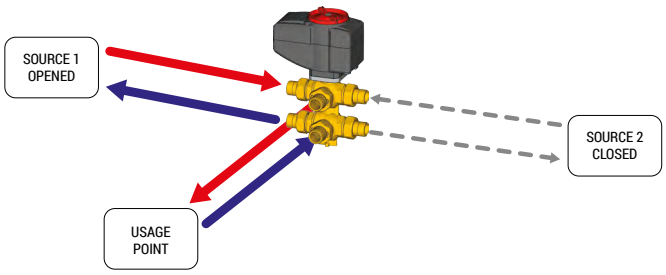
B'	40°÷50°	0 %	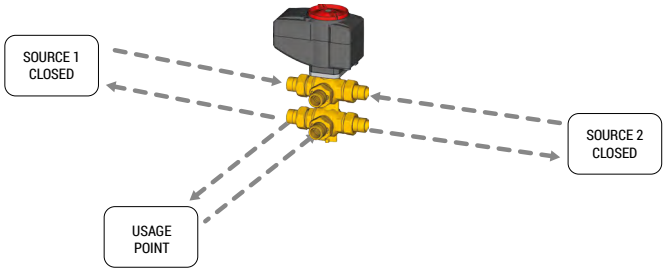
B"	30°÷60°	0 %	
B	75°÷90°	100 %	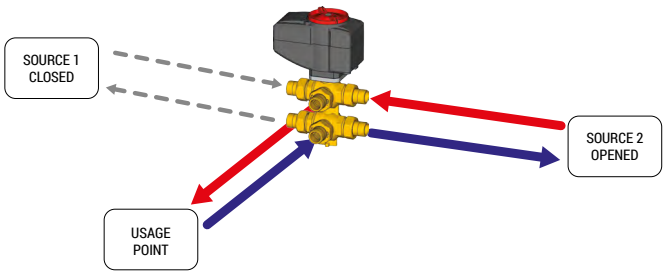

Giacomini S.p.A.
Via per Alzo 39, 28017 San Maurizio d'Opaglio (NO) Italia
consulenza.prodotti@giacomini.com
+39 0322 923372 - giacomini.com

Overpressure protection system

When using the 6-way valve for combined heating/cooling applications (radiant ceilings, fan-coil), the fluid inside the user circuit may become completely isolated when the valve is in the closed position (no heating or cooling). The pressure of the trapped fluid inside the user circuit may then increase or decrease due to changes in temperature of the fluid caused by the room temperature.

The 6-way valve is equipped with integrated protection against overpressure, and is designed to compensate for such pressure variations.

The upper ball of the valve has a small hole in its interior **(ref. A)** which maintains the connection of the "usage point" with the "source 1", even when the valve is closed (stem position 45°). The combined action of the two balls (upper and lower) prevents the circulation of fluid when the valve is in the closed position. The overpressure protection system does not compromise hydraulic separation between the two circuits (source 1 and source 2): the two hydraulic circuits remain separate.

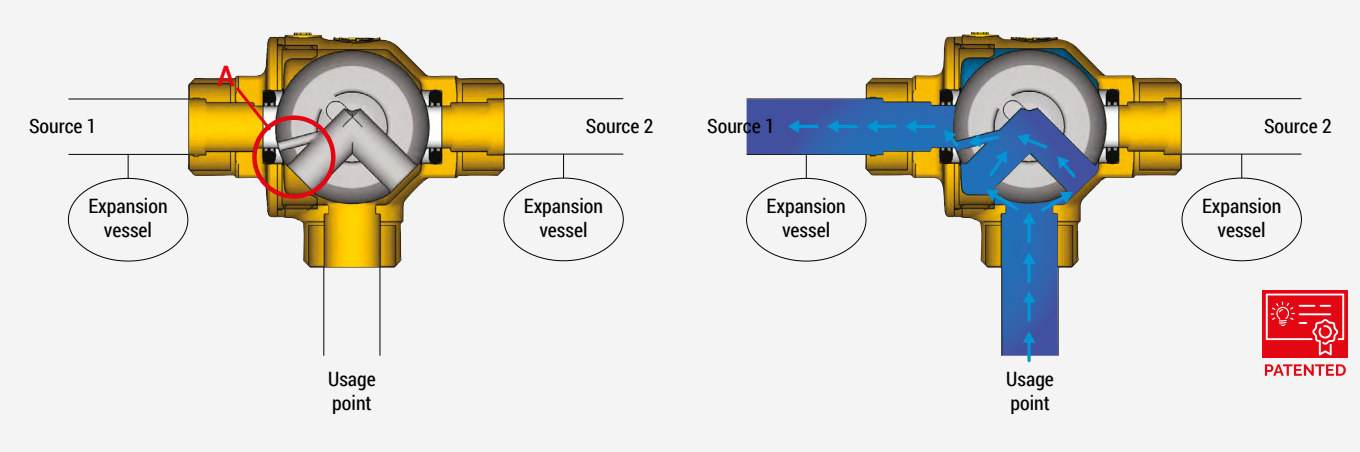

Components

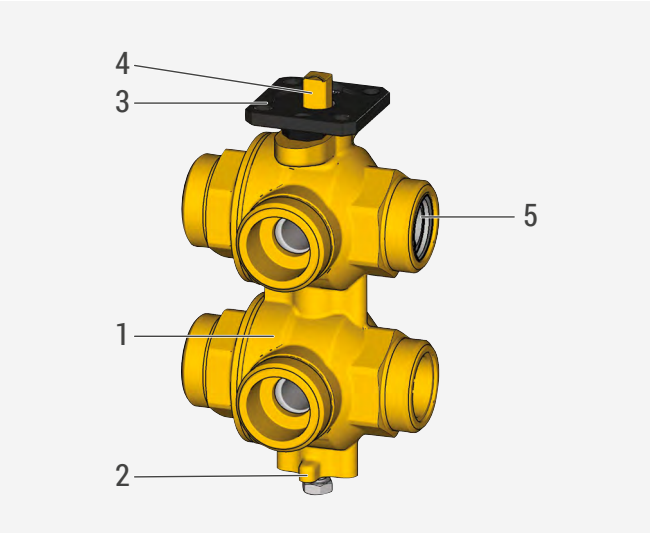

1	Valve body
2	M4 or M6 (depending on codes) holes for valve fixing
3	F04 - ISO 5211 connection for actuator installation
4	Command stem
5	Calibrated washers with seeger ring

Giacomini S.p.A.
Via per Alzo 39, 28017 San Maurizio d'Opaglio (NO) Italia
consulenza.prodotti@giacomini.com
+39 0322 923372 - giacomini.com

Installation

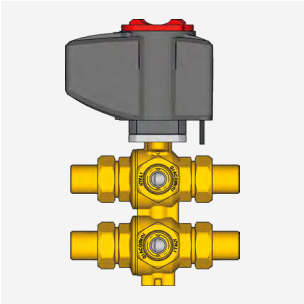
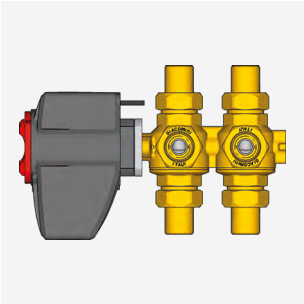
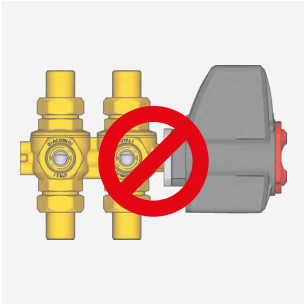
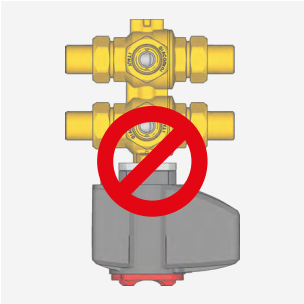

⚠ **WARNING.** The valve can be installed in any position but it's important that the actuator is not in an upside-down position or with the power supply cable coming in from above (to avoid possible problems due to possible condensation).

P21S calibrated washers installation

To install the washer it is necessary to manually insert the washer inside the valve fitting and then lock it by inserting the Seeger ring (supplied with the washer) using a tweezers.

NOTE. The two calibrated washers are used to balance the flow rate in the two circuits (from source 1 to user; from source 2 to user).
The two circuits may require different Kv values, so they can be used with two different models of calibrated washer (see table of calibrated washers on page 2).
Calibrated washers can be installed either on the delivery or on the return.

Calibrated washers for R274 and R274N of 1":
R274Y045, R274Y145, R274Y023, R274Y024, R274Y025

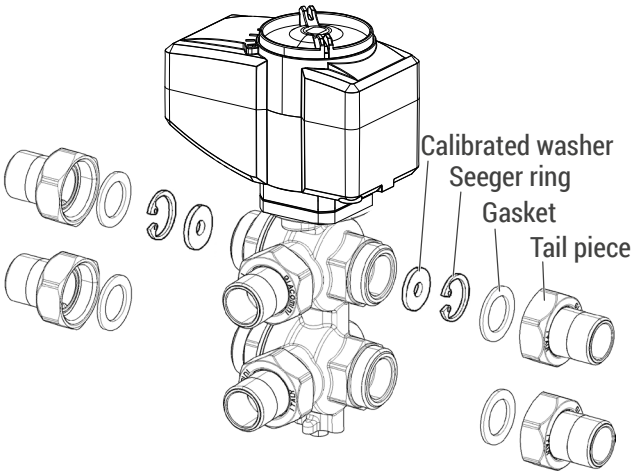

Calibrated washers for R274N of 1/2":
R274Y033, R274Y133

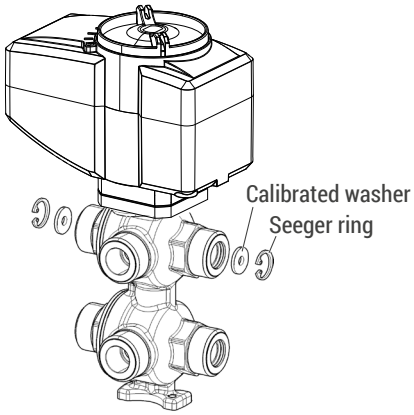

Maintenance

Once installed, the valve requires no maintenance. It is however recommended to periodically check the correct operation of the actuator and check that there are no hydraulic leaks.

Giacomini S.p.A.
Via per Alzo 39, 28017 San Maurizio d'Opaglio (NO) Italia
consulenza.prodotti@giacomini.com
+39 0322 923372 - giacomini.com

Dimensions

R274 (valves with flat seat tail pieces)

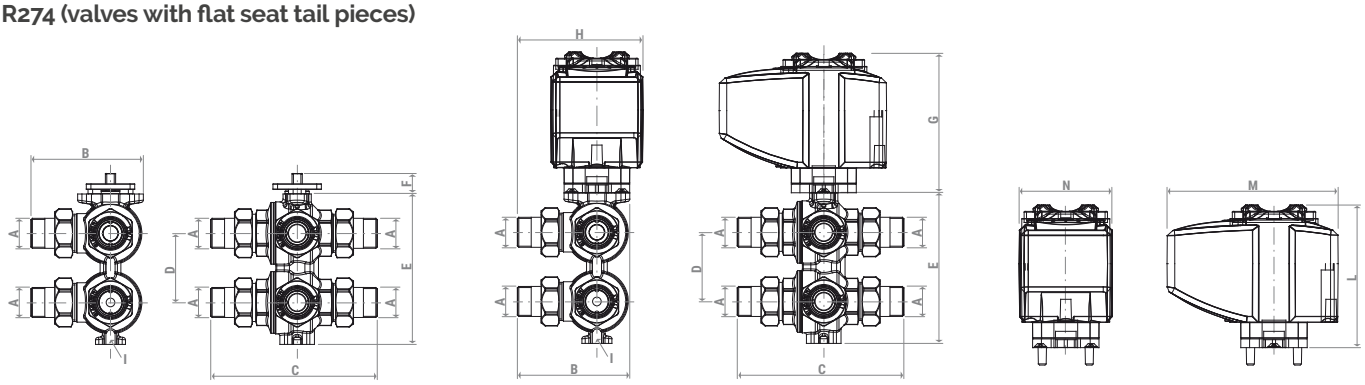

PRODUCT CODE	A	B [mm]	C [mm]	D [mm]	E [mm]	F [mm]	G [mm]	H [mm]	I	L [mm]	M [mm]	N [mm]
R274Y023	G 1/2"M	97	147	60	131	18	90	100	1 hole M6	90	108	59
R274Y024	G 3/4"M	96	145	60	131	18	90	100	1 hole M6	90	108	59
R274Y025	G 1"M	104	161	60	131	18	90	107	1 hole M6	90	108	59

R274N (valves without tail pieces)

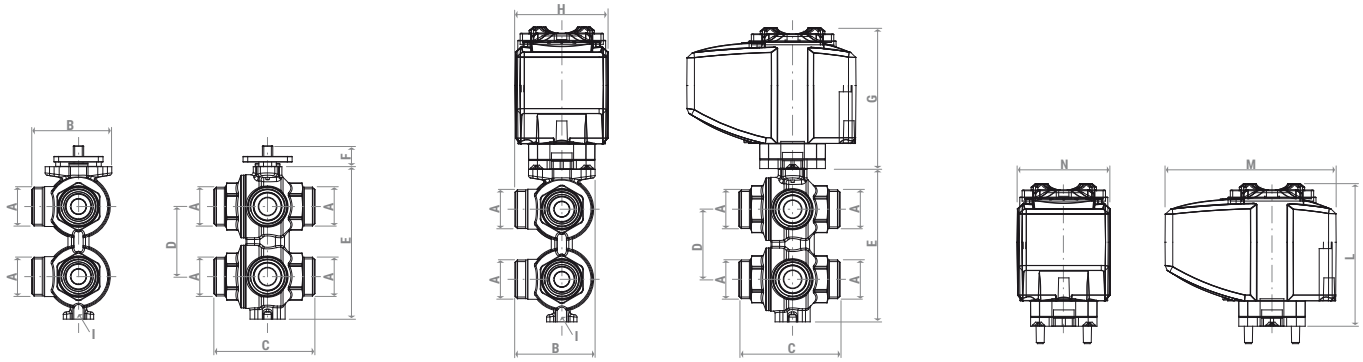

PRODUCT CODE	A	B [mm]	C [mm]	D [mm]	E [mm]	F [mm]	G [mm]	H [mm]	I	L [mm]	M [mm]	N [mm]
R274Y033	G 1/2"M	51	68	45	100	18	90	59	2 holes M4	90	108	59
R274Y133	G 1/2"M	51	68	45	100	18	90	59	2 holes M4	90	108	59
R274Y045	G 1"M	67	87	60	131	18	90	70	1 hole M6	90	108	59
R274Y145	G 1"M	67	87	60	131	18	90	70	1 hole M6	90	108	59

Giacomini S.p.A.
Via per Alzo 39, 28017 San Maurizio d'Opaglio (NO) Italia
consulenza.prodotti@giacomini.com
+39 0322 923372 - giacomini.com

Product specifications

R274
6-way zone valve, ideal for managing the water supply to a single usage point from two different sources of thermal energy. Body in brass CW617N. Gaskets in PTFE. Male threaded connections ISO 228 with flat seat tail pieces. Calibrated washers can be installed for controlling losses of pressure. Fluid working temperature range: 5÷90 °C. Rated pressure: 16 bar. Maximum glycol percentage: 50 %.

R274N
6-way zone valve, ideal for managing the water supply to a single usage point from two different sources of thermal energy. Body in brass CW617N or CW602N (DZR) depending on versions. Gaskets in PTFE. Male threaded connections ISO 228 with optional fittings installation. Calibrated washers can be installed for controlling losses of pressure. Fluid working temperature range: 5÷90 °C. Rated pressure: 16 bar. Maximum glycol percentage: 50 %.

UNIT OF MEASUREMENT.
1 bar = 100 kPa
1 m^3/h = 1000 l/h = 16,7 l/min = 0,28 l/s

Safety Warning. Installation, commissioning and periodical maintenance of the product must be carried out by qualified operators in compliance with national regulations and/or local standards. A qualified installer must take all required measures, including use of Individual Protection Devices, for his and others' safety. An improper installation may damage people, animals or objects towards which Giacomini S.p.A. may not be held liable.

Package Disposal. Carton boxes: paper recycling. Plastic bags and bubble wrap: plastic recycling.

Additional information. For more information, go to giacomini.com or contact our technical assistance service. This document provides only general indications. Giacomini S.p.A. may change at any time, without notice and for technical or commercial reasons, the items included herewith. The information included in this technical sheet do not exempt the user from strictly complying with the rules and good practice standards in force.

Product Disposal. Do not dispose of product as municipal waste at the end of its life cycle. Dispose of product at a special recycling platform managed by local authorities or at retailers providing this type of service.

Giacomini S.p.A.
Via per Alzo 39, 28017 San Maurizio d'Opaglio (NO) Italia
consulenza.prodotti@giacomini.com
+39 0322 923372 - giacomini.com