R206A

Pressure independent control valve (PICV)

Energy Management

Datasheet
1023EN 06/2025

PATENTED

The pressure independent control valve R206A (PICV), combines an automatic control of the flow rate with an optional control of the valve throught an actuator.
The valve is able to regulate the flow rate and keep it constant as the differential pressure conditions vary within the hydraulic circuit in which it is installed.
The valve can be used with two operating modes:

- pressure independent flow rate control (with K281 actuator installed) in accordance with the thermal load requirements of the circuit section to be controlled;
- limitation of the flow rate and/or shut-off of the fluid (without actuator or with R473/R473HE thermo-electric actuator installed).

Flow rate adjustment is guaranteed within the declared differential pressure range, with a maintained error of ± 10 % on the controlled flow rate value.
The valve is equipped with pressure outlets for measuring the differential pressure in combination with a differential pressure gauge and its own probes.

Giacomini S.p.A.
Via per Alzo 39, 28017 San Maurizio d'Opaglio (NO) Italy
consulenza.prodotti@giacomini.com
+39 0322 923372 - giacomini.com

Versions and product codes

Versions with tail pieces

PRODUCT CODE	DN VALVE BODY SIZE	CONNECTIONS	INDICATOR COLOUR	HANDWHEEL COLOUR	WORKING FLOW RATE RANGE [l/h]		WORKING DIFFERENTIAL PRESSURE RANGE [kPa]	
					L (LOW)	H (HIGH)	WITH R473/R473HE THERMO-ELECTRIC ACTUATOR	WITH K281-1/K281-2 ACTUATOR OR WITHOUT ACTUATOR
R206AY113	15	G 1/2"M with tail pieces	RED	GREY	35÷520		25÷400	25÷800
R206AY103	15	G 1/2"M with tail pieces	BLUE	RED	150÷380	180÷630	25÷400	25÷800
R206AY104	20	G 3/4"M with tail pieces	BLACK	RED	320÷910	700÷1175	25÷400	25÷800
R206AY105	20	G 1"M with tail pieces	GREEN	BLUE	290÷1000	860÷1500	25÷400	25÷800
R206AY125	25	G 1"M with tail pieces	BLUE	RED	600÷3500		N/A	25÷400
R206AY106	25	G 1-1/4"M with tail pieces	BLACK	BLUE	800÷4700		N/A	25÷400
R206AY107	50	G 1-1/2"M with tail pieces	Brass indicator	N/A	3000÷14000		N/A	50÷400
R206AY108	50	G 2"M with tail pieces	Brass indicator	N/A	3000÷14000		N/A	50÷400

Versions without tail pieces

PRODUCT CODE	DN VALVE BODY SIZE	CONNECTIONS	INDICATOR COLOUR	HANDWHEEL COLOUR	WORKING FLOW RATE RANGE [l/h]		WORKING DIFFERENTIAL PRESSURE RANGE [kPa]	
					L (LOW)	H (HIGH)	WITH R473/R473HE THERMO-ELECTRIC ACTUATOR	WITH K281-1 ACTUATOR OR WITHOUT ACTUATOR
R206AMY103	15	G 3/4"M	BLUE	RED	150÷380	180÷630	25÷400	25÷800
R206AMY104	20	G 1"M	BLACK	RED	320÷910	700÷1175	25÷400	25÷800
R206AMY114	20	G 1"M	GREEN	BLUE	290÷1000	860÷1500	25÷400	25÷800

Accessories

- **K281X062 (K281-1)**: actuator 24 V (0...10 V) for proportional linear flow rate control, for DN15, DN20 and DN25 valves
- **K281X063 (K281-1)**: actuator 24 V (0...10 V) for proportional linear flow rate control, with fail-safe, for DN15, DN20 and DN25 valves
- **K281X082 (K281-2)**: actuator 24 V (0...10 V) for proportional linear flow rate control, for DN50 valves
- **R473X221**: thermo-electric actuator 230 V, normally closed, ON/OFF type
- **R473X222**: thermo-electric actuator 24 V, normally closed, ON/OFF type
- **R473HEX001**: thermo-electric actuator 230 V, normally closed, 2-conductor wire, IP54, 1 W
- **R453FY002**: adapter ring M30 x 1,5 mm for R473 thermo-electric actuator
- **R225EY001**: differential pressure gauge with probes
- **P206Y001**: pair of pressure outlets
- **P206Y011**: pair of adjustable fittings for pressure outlets

Spare parts

- **R73PY010**: regulation key for the presetting of the flow rate, for DN15, DN20 and DN25 valves
- **R74Y001**: regulation key for the presetting of the flow rate, for DN50 valves

Giacomini S.p.A.
Via per Alzo 39, 28017 San Maurizio d'Opaglio (NO) Italy
consulenza.prodotti@giacomini.com
+39 0322 923372 - giacomini.com

Technical data

- Fluids: water, glycol solutions (max. 50 % glycol)
- Temperature range: 5÷120 °C
- Room temperature range: 1÷50 °C
- Max. working pressure: 25 bar (2,5 MPa)
- Max. differential pressure: 8 bar (4 bar with R473/R473HE thermo-electric actuators and for DN25, DN50 valves)
- Regulation accuracy: ± 10 % regulated value
- Leakage rate (according to ISO 5208): class A, no leakage
- Connections for pressure outlets: G 1/4"F
- Actuator connection: M30 x 1,5 mm
- Working flow rate range:

PRODUCT CODE	REG. SCALE "L" (LOW)	REG. SCALE "H" (HIGH)
R206AY113	35÷520 l/h (single regulation scale)	
R206AY103 R206AMY103	150÷380 l/h	180÷630 l/h
R206AY104 R206AMY104	320÷910 l/h	700÷1175 l/h
R206AY105 R206AMY114	290÷1000 l/h	860÷1500 l/h
R206AY125	600÷3500 l/h (single regulation scale)	
R206AY106	800÷4700 l/h (single regulation scale)	
R206AY107	3000÷14000 l/h (single regulation scale)	
R206AY108	3000÷14000 l/h (single regulation scale)	

- Working differential pressure range:

PRODUCT CODE	WITH R473/R473HE THERMO-ELECTRIC ACTUATOR	WITH K281-1/K281-2 ACTUATOR OR WITHOUT ACTUATOR
R206AY113	25÷400 kPa	25÷800 kPa
R206AY103 R206AMY103	25÷400 kPa	25÷800 kPa
R206AY104 R206AMY104	25÷400 kPa	25÷800 kPa
R206AY105 R206AMY114	25÷400 kPa	25÷800 kPa
R206AY125	N/A	25÷400 kPa
R206AY106	N/A	25÷400 kPa
R206AY107	N/A	50÷400 kPa
R206AY108	N/A	50÷400 kPa

Materials

- Body for DN15, DN20, DN25 valves: brass "DZR" CW602N - UNI EN 12165
- Body for DN50 valves: brass "DZR" CB/CC770S - UNI EN 1982
- Bonnet and all components in contact with the water not indicated: brass "DZR" CW602N - UNI EN 12165
- Tail pieces: brass CW617N - UNI EN 12165
- Regulator stem and piston: stainless steel AISI 303
- Springs: stainless steel AISI 302
- Membrane, stopper and O-Ring: EPDM
- Bonnet separator: PA66-GF30

NOTE. High performance materials. All valve components in contact with water are made of DZR brass to provide greater corrosion resistance and long life. The mobile components are in stainless steel for greater reliability over time.

Regulation accuracy

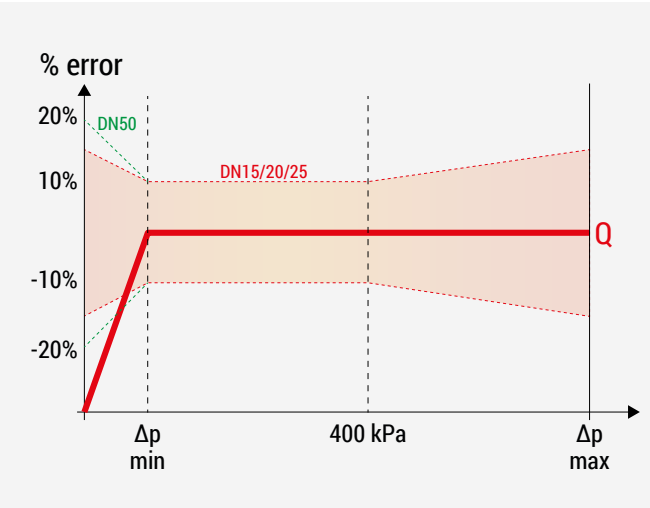

Valve with linear control feature

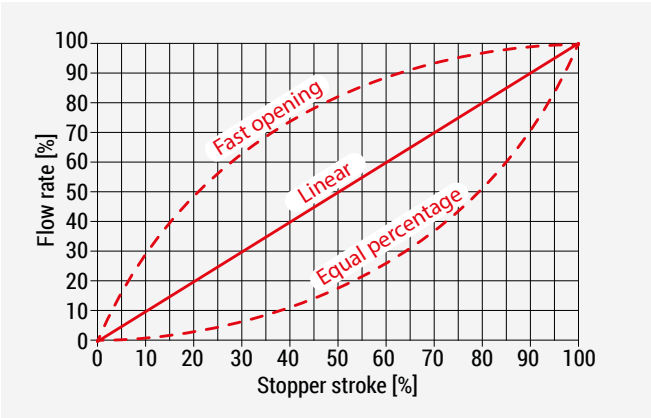

Valve performance tested experimentally by a third party lab according to the BTS 1/2019 testing standard.

Components

Versions DN15, DN20, DN25

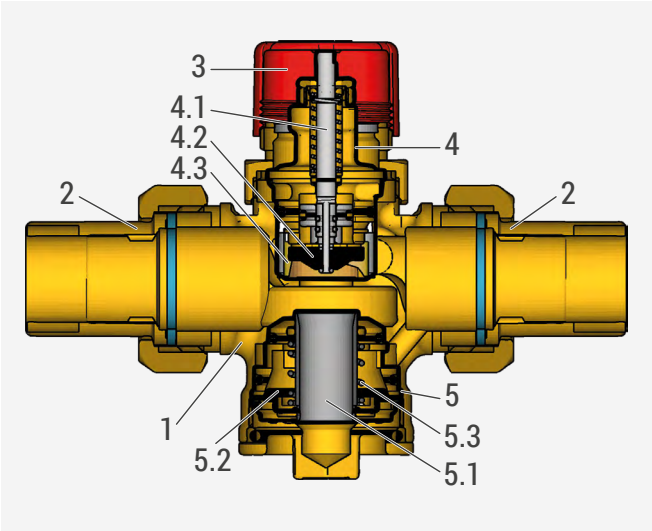

1	Valve body
2	Tail piece with nut and gasket
3	Manual handwheel
4	Presetting bonnet
4.1	Valve stem
4.2	Stopper
4.3	Presetting separator
5	Balancing unit
5.1	Piston
5.2	Membrane
5.3	Thrust spring

Versions DN50

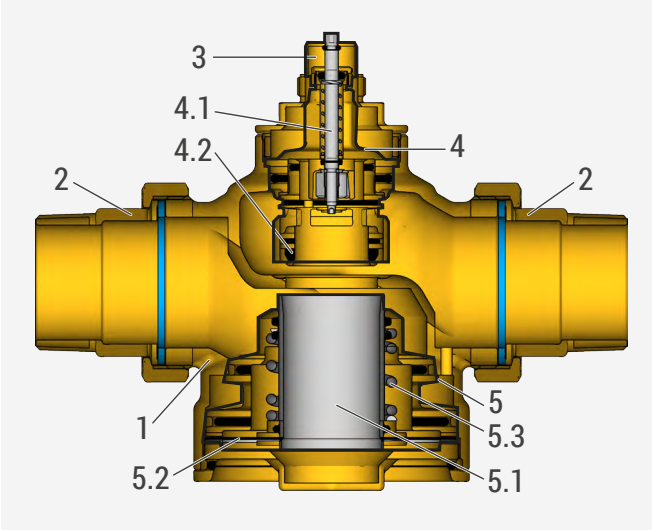

1	Valve body
2	Tail piece with nut and gasket
3	Presetting separator
4	Presetting bonnet
4.1	Valve stem
4.2	Stopper
5	Balancing unit
5.1	Piston
5.2	Membrane
5.3	Thrust spring

Giacomini S.p.A.
Via per Alzo 39, 28017 San Maurizio d'Opaglio (NO) Italy
consulenza.prodotti@giacomini.com
+39 0322 923372 - giacomini.com

Operation

The R206A valve can be used with two operating modes:
- independent control of the pressure (with K281-1/K281-2 actuator installed);
- limitation of the flow rate (without actuator) and/or shut-off of the fluid (with R473/R473HE thermo-electric actuator installed).

Operating principle

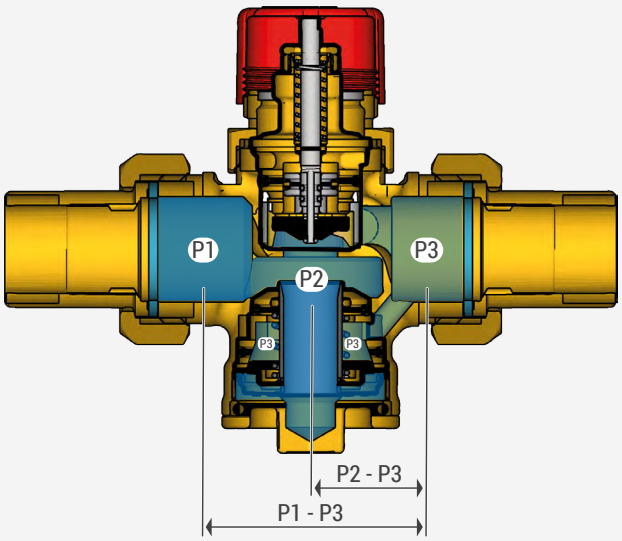

P1: upstream pressure
P2: intermediate pressure
P3: downstream pressure
P1-P3: valve pressure difference

To ensure that the valve maintains a constant flow rate, the pressure difference **P1-P3** on the valve must be within a range of 25÷400 kPa or 25÷800 kPa depending on whether the actuators are installed or not. (see paragraph "Technical data").

The valve controls and maintains constant differential pressure **P2-P3** through the movement of the piston ("Components" - Ref. 5.1), resulting from the force generated by the pressure difference and the internal thrust spring ("Components" - Ref. 5.3) .

If the pressure difference **P1-P3** on the valve increases, the piston rises and reduces the passage of fluid to keep **P2-P3** unchanged; in these conditions the flow rate **Q** will always remain constant as the flow coefficient **Kv** of the valve decreases.

$$Q = Kv \cdot \sqrt{\Delta p}$$

Q constant	Δp ↑	Kv ↓
	Δp ↓	Kv ↑

Bonnet with pressure compensation system

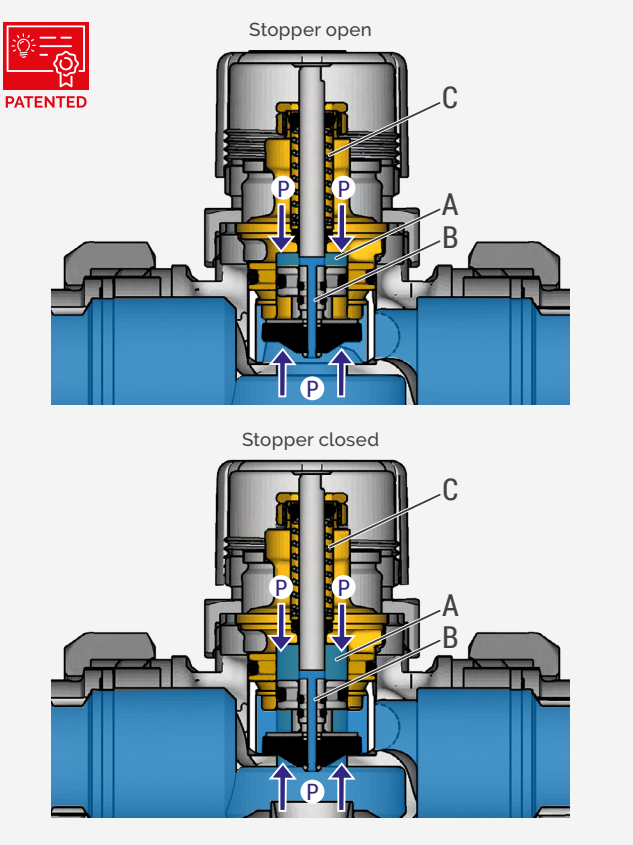

The valve R206A has a bonnet with a pressure compensation system.
Thanks to the balancing chamber **(A)** inside the valve, the force required to close the valve is reduced even with very high differential pressures.
The bonnet stem is perforated **(B)** in such a way as to put the balancing chamber in communication with the pressure acting on the stopper.
Thanks to this feature, the actuators installed on the valve work with less effort and ensure a perfect hydraulic seal of the seat.
The return spring is also located in a sealed chamber **(C)**, to avoid possible blockages due to the presence of water and the formation of scale in the spring seat chamber.

Giacomini S.p.A.
Via per Alzo 39, 28017 San Maurizio d'Opaglio (NO) Italy
consulenza.prodotti@giacomini.com
+39 0322 923372 - giacomini.com

Pressure independent control

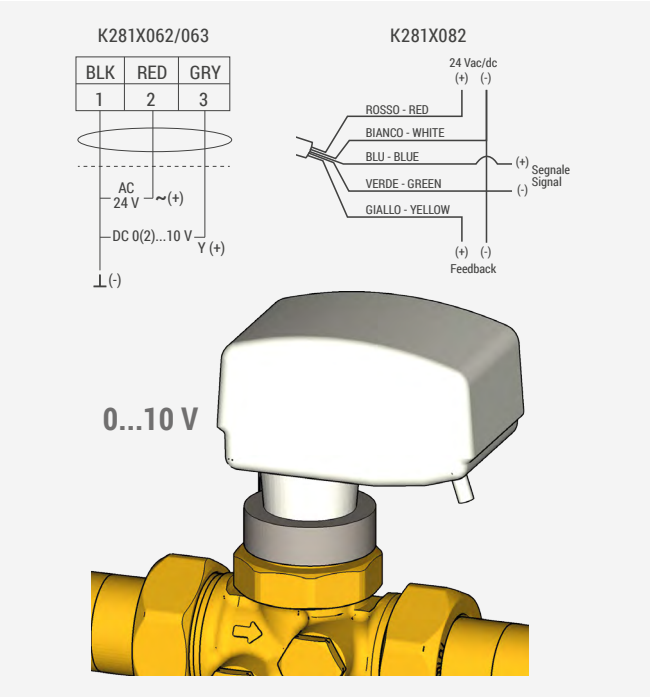

The best operation of the valve R206A is obtained by installing a **proportional linear actuator K281-1/K281-2.** The actuator, in combination with an electronic unit (controller), is able to automatically adjust the flow rate from the preset maximum value Qmax (see paragraph "Flow rate presetting"), to the minimum value, depending on the thermal requirements.

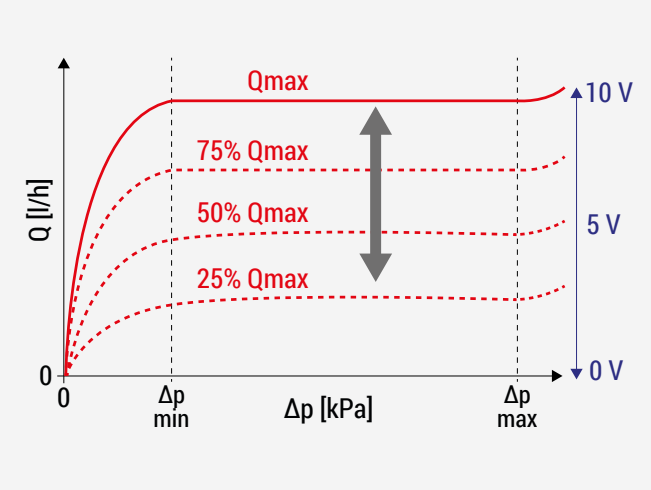

Limitation of the flow rate and/or shut-off of the fluid

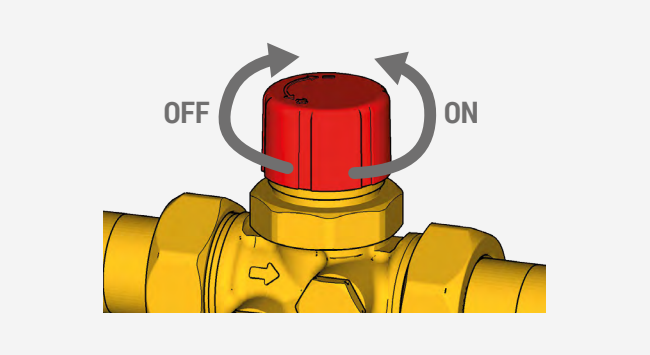

Through the **manual handwheel** it is possible to isolate the circuit section controlled by the valve.
Turn the knob clockwise to close the handwheel; counterclockwise to open it.

- with handwheel closed the complete flow shut-off is obtained;
- with handwheel open the flow rate limitation function is obtained at the preset value (see paragraph "Flow rate presetting").

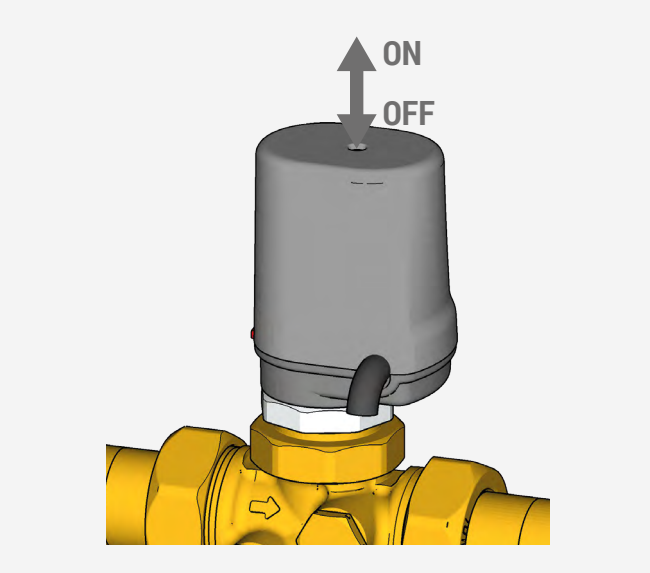

The same function can also be obtained automatically by installing an **R473 thermo-electric actuator** of the ON/OFF type, electrically well connected:

- with R473 thermo-electric actuator closed the complete flow shut-off is obtained;
- with R473 thermo-electric actuator open the flow rate stabilization function is obtained at the preset value (see paragraph "Flow rate presetting").

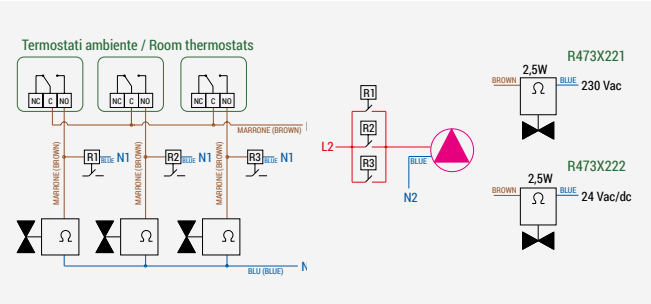

Giacomini S.p.A.
Via per Alzo 39, 28017 San Maurizio d'Opaglio (NO) Italy
consulenza.prodotti@giacomini.com
+39 0322 923372 - giacomini.com

Flow rate presetting

Versions DN15, DN20, DN25

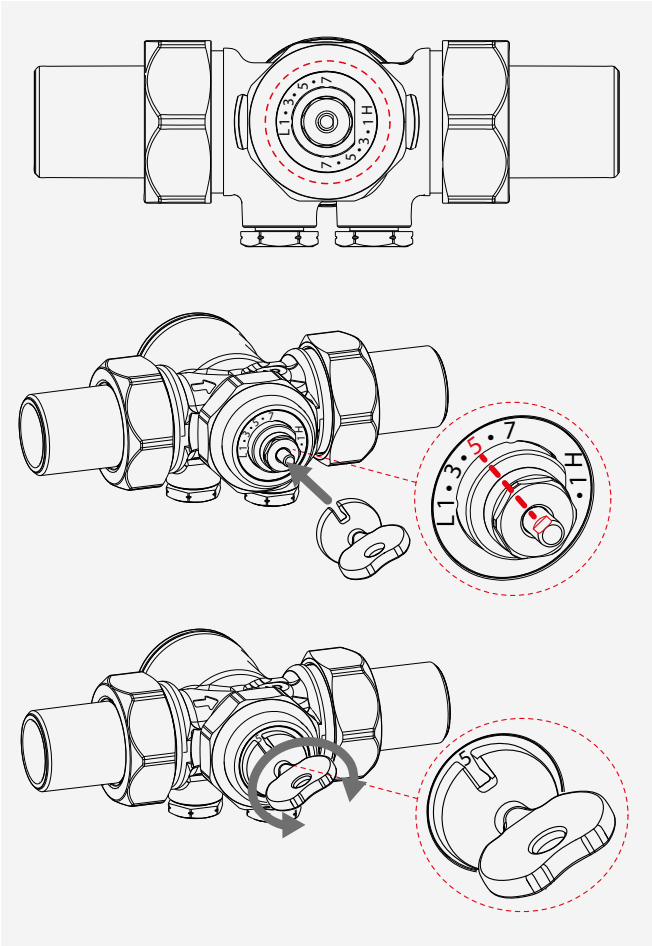

The R206AY103/104/105 and R206AMY103/104/114 valves are equipped with a dual regulation scale of the flow rate:

- **L (LOW):** for low flow rate
- **H (HIGH):** for high flow rate

To set the valve adjustment based on the desired flow rate, use the regulation key **R73PY010** (included in the package) and turn the valve stem clockwise or counterclockwise until reaching the desired value printed on the plastic disk of the valve and identifiable through the table below.

The transition from one regulation scale to the other is possible at any time, even during the operation of the system; in this way it is possible to choose the desired flow rate value without having to replace the valve.

The dual scale guarantees greater accuracy in the regulation, given that the controlled flow rate range is more restricted.

The R206AY113/125/106 valves, instead, are equipped with a single regulation scale of the flow rate.

PRODUCT CODE	DN	WORKING DIFFERENTIAL PRESSURE RANGE [kPa]	
		WITH R473/R473HE THERMO-ELECTRIC ACTUATOR	WITH K281-1 ACTUATOR OR WITHOUT ACTUATOR
R206AY113	15	25÷400	25÷800
R206AY103 R206AMY103	15	25÷400	25÷800
R206AY104 R206AMY104	20	25÷400	25÷800
R206AY105 R206AMY114	20	25÷400	25÷800
R206AY125	25	N/A	25÷400
R206AY106	25	N/A	25÷400

WORKING FLOW RATE RANGE [l/h]										
REGULATION SCALE	MIN	1	2	3	4	5	6	7	8	9
SINGLE	35	95	120	230	310	400	460	520	-	-
L (LOW)	-	150	175	200	250	300	340	380	-	-
H (HIGH)	-	180	250	350	440	500	570	630	-	-
L (LOW)	-	320	400	520	640	770	870	910	-	-
H (HIGH)	-	700	820	910	970	1030	1100	1175	-	-
L (LOW)	-	290	400	500	640	730	900	1000	-	-
H (HIGH)	-	860	900	940	1110	1270	1330	1500	-	-
SINGLE	-	600	1000	1200	1600	2000	2300	2800	3100	3500
SINGLE	-	800	1000	1300	1900	2500	3100	3800	4300	4700

EXAMPLE.
Design flow rate: 300 l/h
Piping DN15

→ Valve required: R206AY103
Regulation scale: L (LOW)
Position: 5

Giacomini S.p.A.
Via per Alzo 39, 28017 San Maurizio d'Opaglio (NO) Italy
consulenza.prodotti@giacomini.com
+39 0322 923372 - giacomini.com

Versions DN50

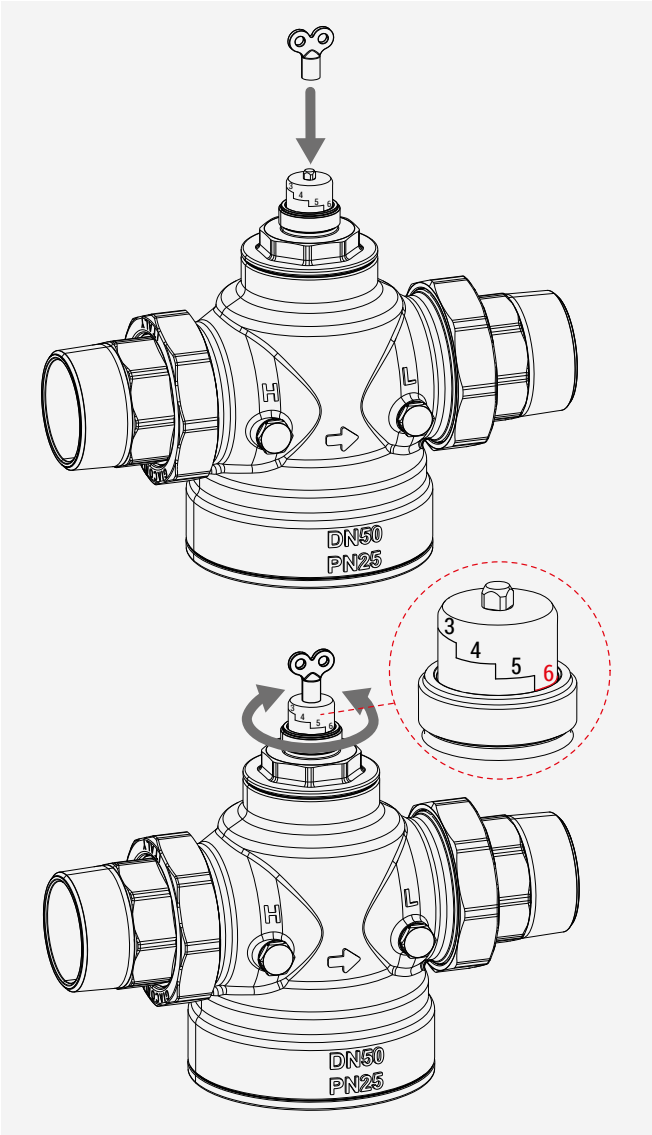

The R206AY107/108 valves are equipped with a single regulation scale of the flow rate.

To set the valve adjustment based on the desired flow rate, use the regulation key **R74Y001** (included in the package) and turn the valve stem clockwise or counterclockwise until reaching the desired value writted on the brass sleeve of the bonnet (in the example, the adjustment value "6" has been set).

The transition from one flow rate to the other is possible at any time, even during the operation of the system; in this way it is possible to choose the desired flow rate value without having to replace the valve.

PRODUCT CODE	DN	WORKING DIFFERENTIAL PRESSURE RANGE [kPa]	
		WITH R473/R473HE THERMO-ELECTRIC ACTUATOR	WITH K281-2 ACTUATOR OR WITHOUT ACTUATOR
R206AY107	50	N/A	50÷400
R206AY108	50	N/A	50÷400

WORKING FLOW RATE RANGE [l/h]							
REGULATION SCALE	1	2	3	4	5	6	7
SINGLE	3000	5200	8300	10000	11500	12500	14000
SINGLE	3000	5200	8300	10000	11500	12500	14000

EXAMPLE.

Design flow rate: 12500 l/h
Piping DN50

→

Valve required: R206AY107
Position: 6

Giacomini S.p.A.
Via per Alzo 39, 28017 San Maurizio d'Opaglio (NO) Italy
consulenza.prodotti@giacomini.com
+39 0322 923372 - giacomini.com

Installation

The R206A valve should preferably be installed on the return circuit of the system.
The installation of a filter upstream of the valve is recommended to prevent damage or blockage due to debris.

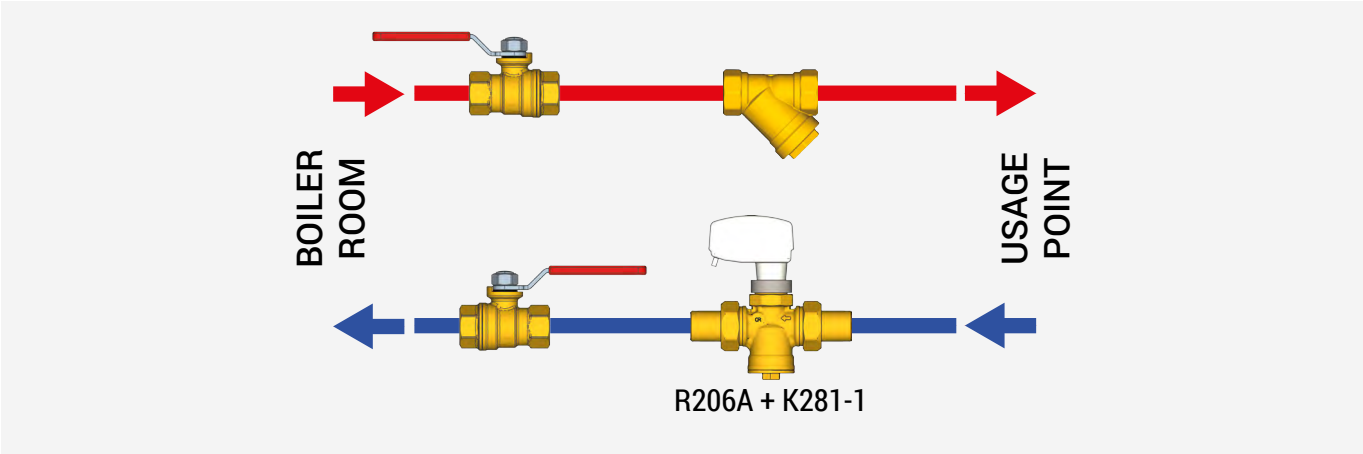

Allowed installation positions

The R206A valve can be installed in any position without an actuator; with actuator (R473, R473HE, K281-1, K281-2) only upside-down installation is not allowed.

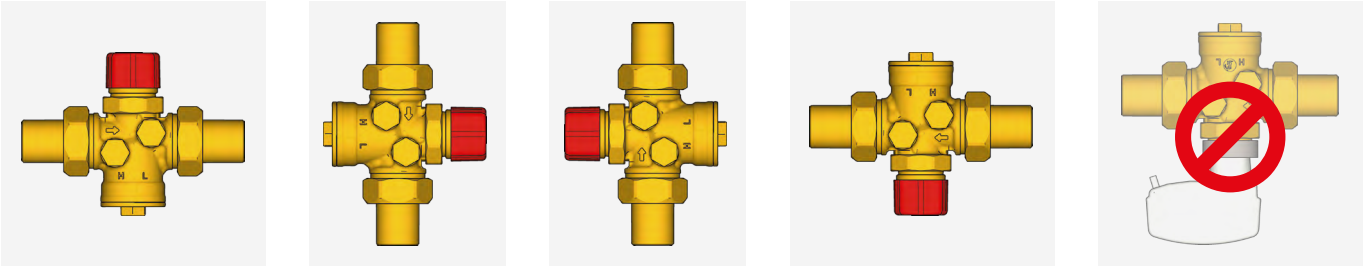

Installation of R473X221 or R473X222 thermo-electric actuators

To install the R473 thermo-electric actuators proceed as follows:

1) Remove the regulation handwheel and manually screw the R453FY002 ring nut with M30 x 1.5 mm connection on the valve body;
2) Fit the thermo-electric actuator on the ring nut applying sufficient pressure to the joint;
3) Turn the thermo-electric actuator by about 15° in a clockwise direction until a click is heard (max. torque 5 Nm). To release the actuator rotate it 15° counterclockwise;
4) Push the red lock button inwards and electrically connect the actuator, carefully following the diagram on the actuator instructions.

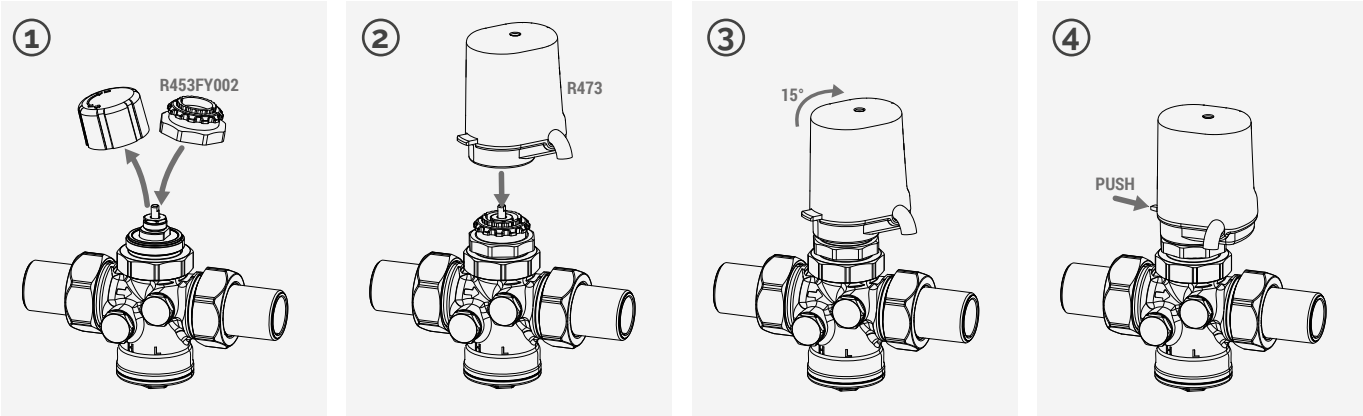

Giacomini S.p.A.
Via per Alzo 39, 28017 San Maurizio d'Opaglio (NO) Italy
consulenza.prodotti@giacomini.com
+39 0322 923372 - giacomini.com

Installation of K281X062/063/082 actuator and R473HEX001 thermo-electric actuator

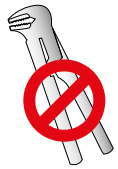

To install K281-1/K281-2 actuator or R473HE thermo-electric actuator proceed as follows:

1) Remove the manual handwheel (in the versions where it's present);
2) Check that the actuator spindle is fully retracted;
3) Manually screw the actuator onto the valve body using the threaded ring nut M30 x 1.5 mm and connect it electrically carefully following the diagram on the actuator instructions.

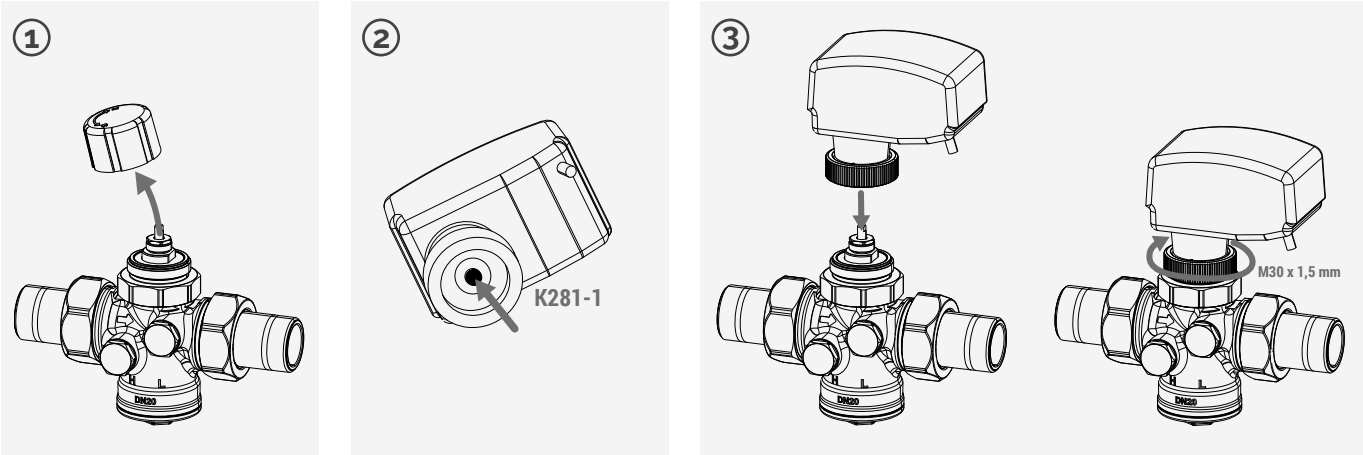

Installation of the P206 pressure outlets and flow rate verification through the R225EY001 diff. pressure gauge

The valve is equipped with connections for the P206 pressure outlets (P206Y001 straight or P206Y011 with adjustable fitting) to be installed with the system switched off and not under pressure.
Using the R225EY001 differential pressure gauge and its probes suitably housed in the P206 pressure outlets, it is possible to measure the Δp of the valve (P1-P3) during normal operation.
If the measured value is included in the working Δp range, it is possible to establish that the effective flow rate of the valve is the preset one (see paragraph "Presetting the flow rate").

To install the P206Y001 pressure outlets and house the probes, proceed as follows:

1) Remove the two brass plugs to free the threaded connections G 1/4"F;
2) Install the pressure outlets by screwing them with a 4 mm Allen key;
3) Slowly insert the needle of the probes into the pressure outlets;
4) Connect the probes to the R225EY001 differential pressure gauge according to the following order:
"+" on the pressure outlet "H" "-" on the pressure outlet "L"

⚠ **WARNINGS.** Water leakage may occur through the pressure outlets during the insertion of the probes. Wear protective clothing and goggles to prevent personal injury during pressure measurement.
Do not use lubricants on the probes to facilitate insertion into the outlets. If necessary, wet the probes with clean water.
Do not leave the probes in the pressure outlet longer than necessary, as this could cause leakage.

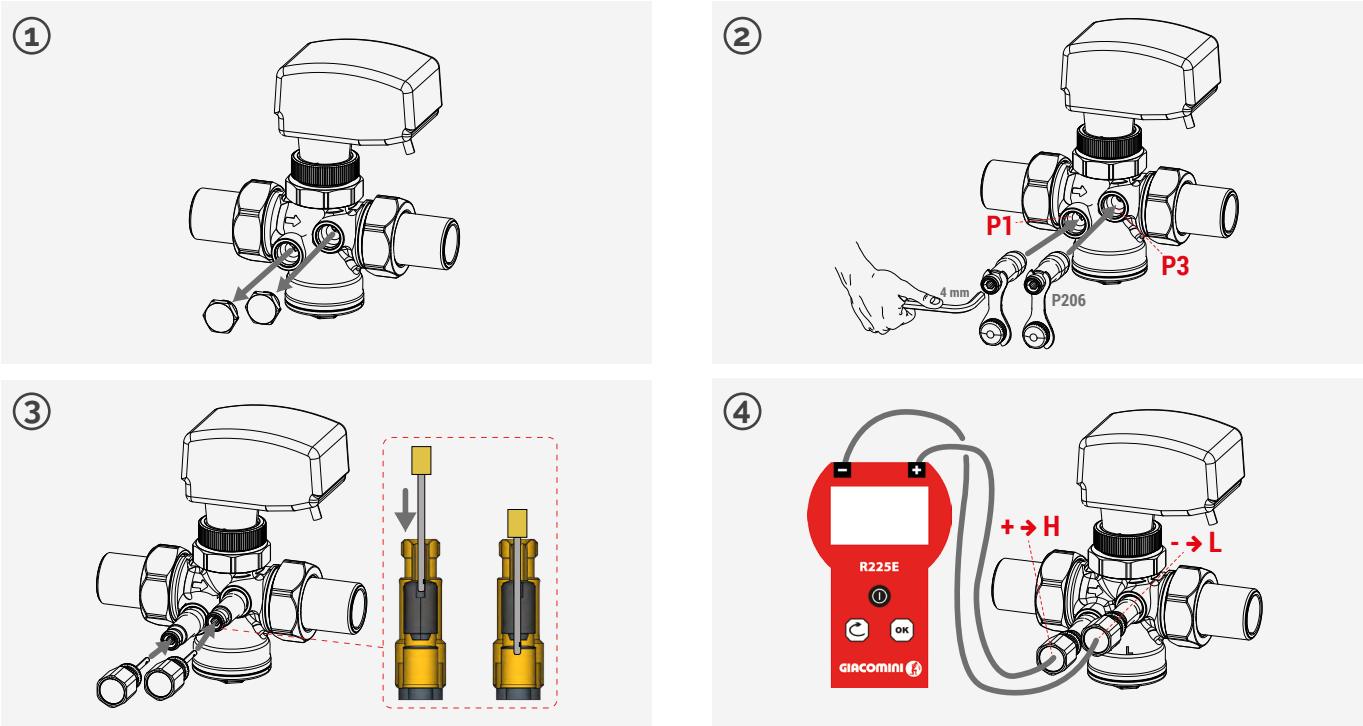

Application diagrams

Application example with radiant floor systems

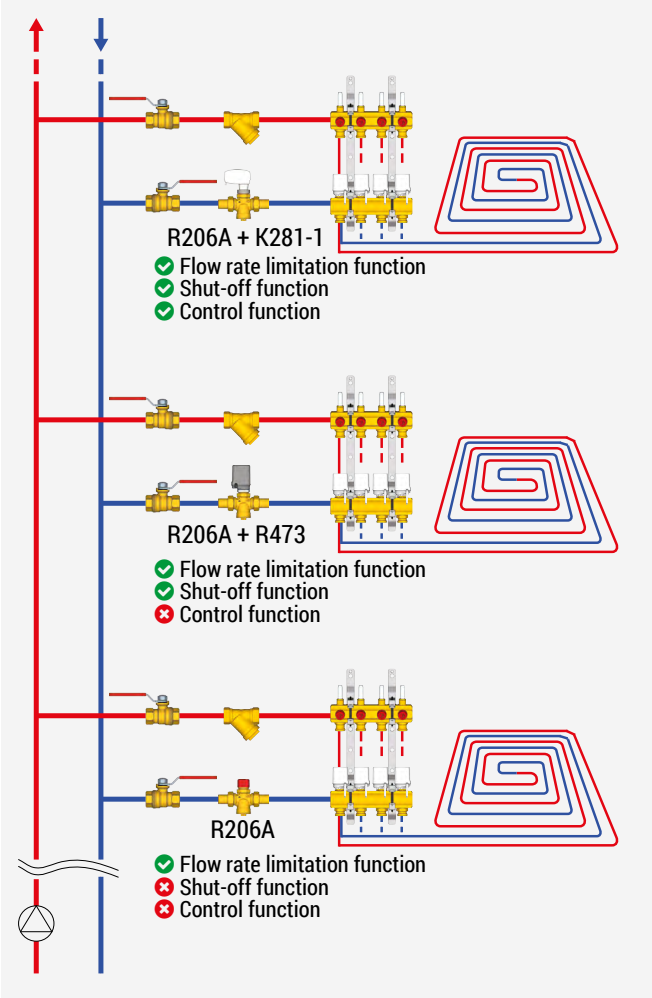

Application example with fan coil systems

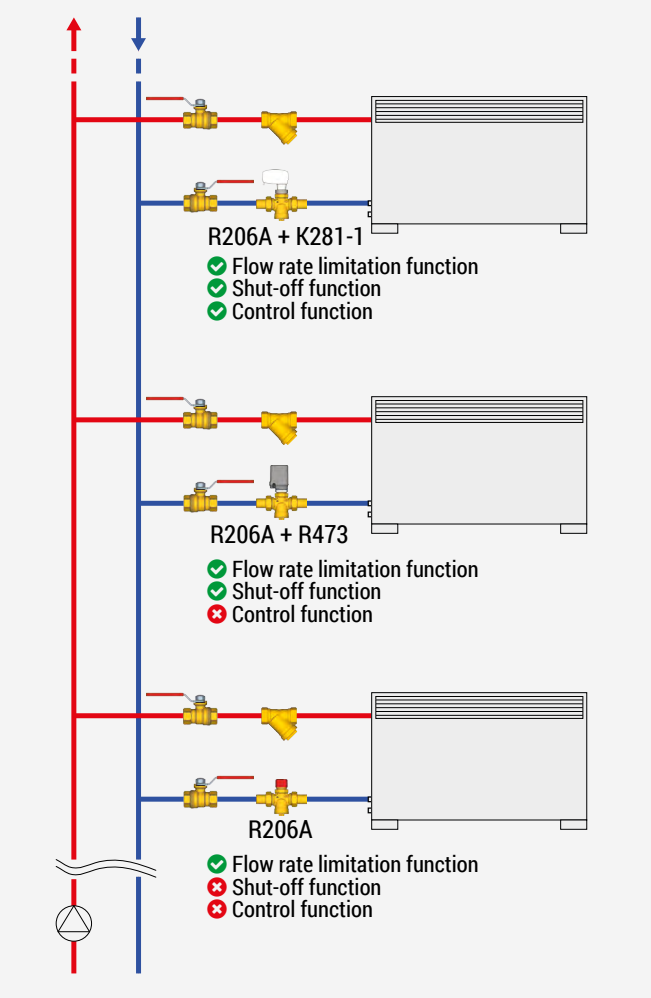

Application example with 4-pipe system with radiant ceiling and 6-way valve

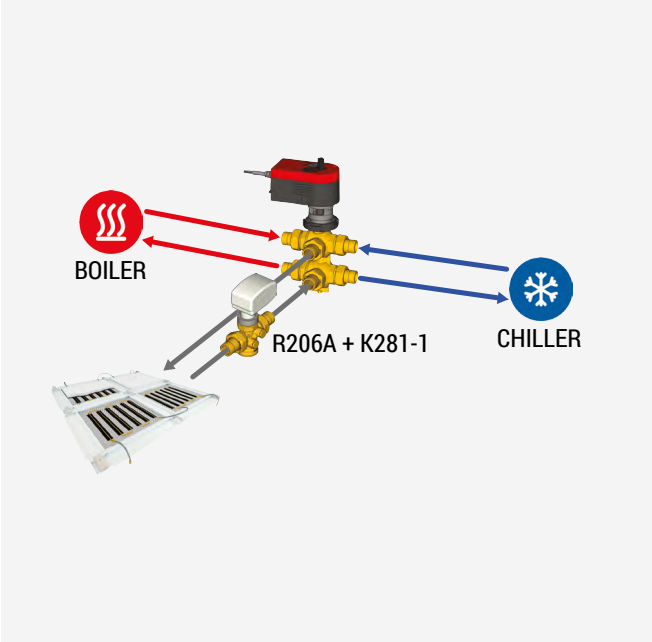

Application example with air handling unit systems (AHU)

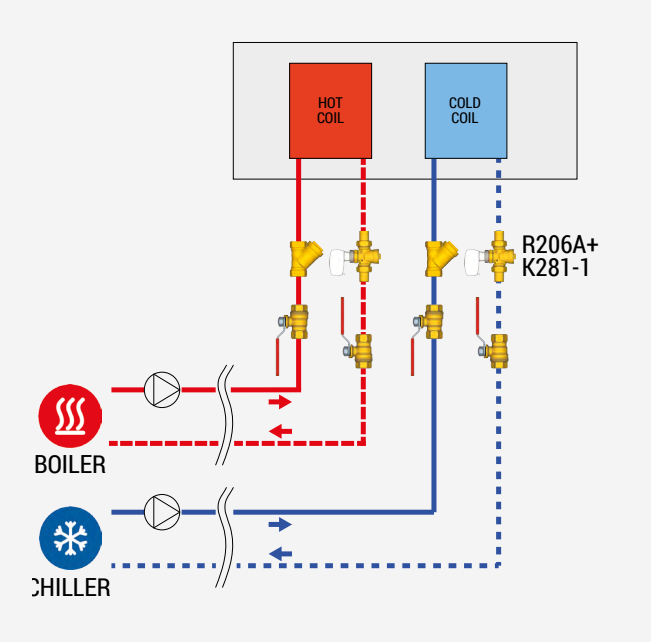

Giacomini S.p.A.
Via per Alzo 39, 28017 San Maurizio d'Opaglio (NO) Italy
consulenza.prodotti@giacomini.com
+39 0322 923372 - giacomini.com

Dimensions

Versions DN15, DN20, DN25 with tail pieces

R206A

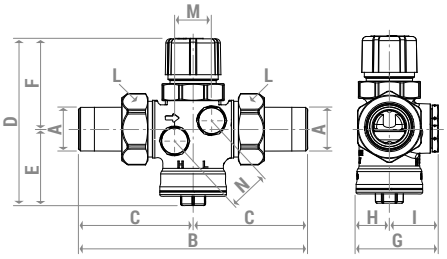

R206A + K281-1

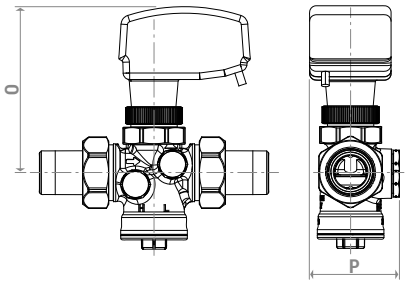

R206A + R473/ R473HE

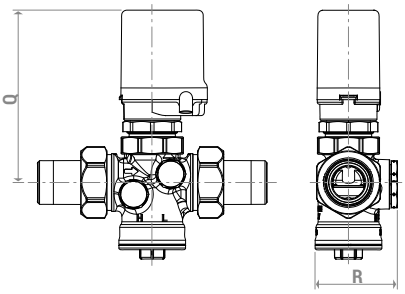

Versions DN50 with tail pieces

R206A

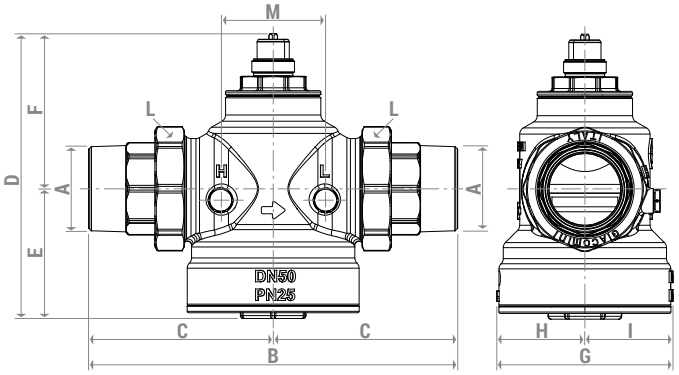

R206A + K281-2

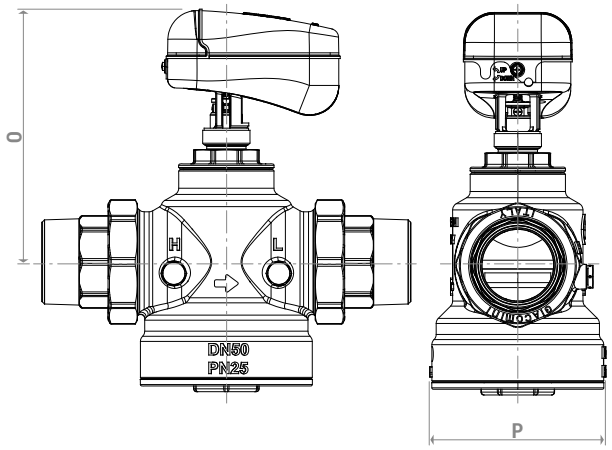

PRODUCT CODE	DN	A [mm]	B [mm]	C [mm]	D [mm]	E [mm]	F [mm]	G [mm]	H [mm]	I [mm]	L [mm]	M [mm]	N [mm]	O [mm]	P [mm]	Q [mm]	R [mm]
R206AY113	15	G 1/2"M	128	64	99	45	54	49	20	29	wr.30	22	25	101	54	103	49
R206AY103	15	G 1/2"M	128	64	99	45	54	49	20	29	wr.30	22	25	101	54	103	49
R206AY104	20	G 3/4"M	136	68	99	45	54	49	20	29	wr.38	22	25	101	54	103	49
R206AY105	20	G 1"M	142	71	99	45	54	49	20	29	wr.38	22	25	101	54	103	49
R206AY125	25	G 1"M	162	81	111	52	59	65	30	35	wr.53	27	31	123	65	N/A	65
R206AY106	25	G 1-1/4"M	165	83	111	52	59	65	30	35	wr.53	27	31	123	65	N/A	65
R206AY107	50	G 1-1/2"M	258	129	199	91	108	120	60	60	wr.82	73	N/A	280	120	N/A	n.d.
R206AY108	50	G 2"M	258	129	199	91	108	120	60	60	wr.82	73	N/A	280	120	N/A	n.d.

Giacomini S.p.A.
Via per Alzo 39, 28017 San Maurizio d'Opaglio (NO) Italy
consulenza.prodotti@giacomini.com
+39 0322 923372 - giacomini.com

Versions DN15, DN20 without tail pieces

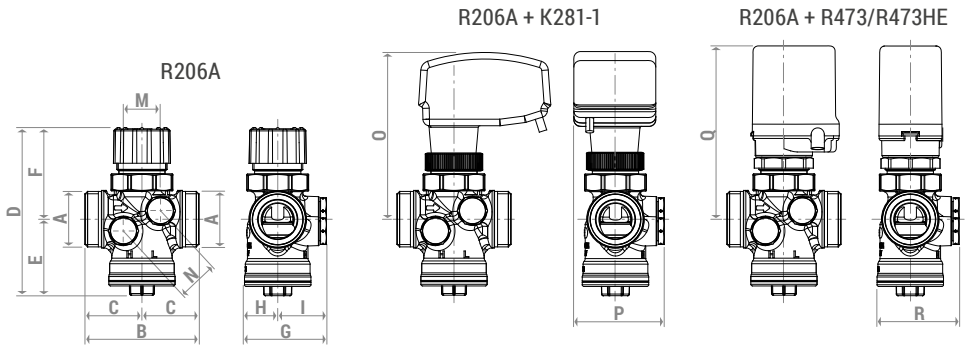

PRODUCT CODE	DN	A [mm]	B [mm]	C [mm]	D [mm]	E [mm]	F [mm]	G [mm]	H [mm]	I [mm]	M [mm]	N [mm]	O [mm]	P [mm]	Q [mm]	R [mm]
R206AMY103	15	G 3/4"M	68	34	99	45	54	49	20	29	22	25	101	54	103	49
R206AMY104	20	G 1"M	68	34	99	45	54	49	20	29	22	25	101	54	103	49
R206AMY114	20	G 1"M	68	34	99	45	54	49	20	29	22	25	101	54	103	49

Product specifications

R206AY113
Pressure independent control valve (PICV). DN15 size, with G 1/2"M tail pieces main connections. Pressure outlet connections G 1/4"F with plug. Actuator connection M30 x 1,5 mm. Body and bonnet in DZR anti-dezincification alloy. Stem, piston and spring in stainless steel. Membrane, stopper and O-Ring in EPDM. Fluids: water and glycol solutions (max. 50 % glycol). Temperature range 5÷120 °C. Room temperature range 1÷50 °C. Max. working pressure 25 bar. Max. working differential pressure: 8 bar (4 bar with R473/R473HE actuator). Working differential pressure range 25÷400 kPa with R473/R473HE actuator; 25÷800 kPa with K281-1 actuator or without actuator. Working flow rate range: 35÷520 l/h. Regulation accuracy ± 10 %.

R206AY103
Pressure independent control valve (PICV). DN15 sizes, with G 1/2"M tail pieces main connections. Pressure outlet connections G 1/4"F with plug. Actuator connection M30 x 1,5 mm. Body and bonnet in DZR anti-dezincification alloy. Stem, piston and spring in stainless steel. Membrane, stopper and O-Ring in EPDM. Fluids: water and glycol solutions (max. 50 % glycol). Temperature range 5÷120 °C. Room temperature range 1÷50 °C. Max. working pressure 25 bar. Max. working differential pressure: 8 bar (4 bar with R473/R473HE actuator). Working differential pressure range 25÷400 kPa with R473/R473HE actuator; 25÷800 kPa with K281-1 actuator or without actuator. Dual working flow rate range: 150÷380 l/h and 180÷630 l/h. Regulation accuracy ± 10 %.

R206AY104
Pressure independent control valve (PICV). DN20 sizes, with G 3/4"M tail pieces main connections. Pressure outlet connections G 1/4"F with plug. Actuator connection M30 x 1,5 mm. Body and bonnet in DZR anti-dezincification alloy. Stem, piston and spring in stainless steel. Membrane, stopper and O-Ring in EPDM. Fluids: water and glycol solutions (max. 50 % glycol). Temperature range 5÷120 °C. Room temperature range 1÷50 °C. Max. working pressure 25 bar. Max. working differential pressure: 8 bar (4 bar with R473/R473HE actuator). Working differential pressure range 25÷400 kPa with R473/R473HE actuator; 25÷800 kPa with K281-1 actuator or without actuator. Dual working flow rate range: 320÷910 l/h and 700÷1175 l/h. Regulation accuracy ± 10 %.

R206AY105
Pressure independent control valve (PICV). DN20 sizes, with G 1"M tail pieces main connections. Pressure outlet connections G 1/4"F with plug. Actuator connection M30 x 1,5 mm. Body and bonnet in DZR anti-dezincification alloy. Stem, piston and spring in stainless steel. Membrane, stopper and O-Ring in EPDM. Fluids: water and glycol solutions (max. 50 % glycol). Temperature range 5÷120 °C. Room temperature range 1÷50 °C. Max. working pressure 25 bar. Max. working differential pressure: 8 bar (4 bar with R473/R473HE actuator). Working differential pressure range 25÷400 kPa with R473/R473HE actuator; 25÷800 kPa with K281-1 actuator or without actuator. Dual working flow rate range: 290÷1000 l/h and 860÷1500 l/h. Regulation accuracy ± 10 %.

R206AY125
Pressure independent control valve (PICV). DN25 size, with G 1"M tail pieces main connections. Pressure outlet connections G 1/4"F with plug. Actuator connection M30 x 1,5 mm. Body and bonnet in DZR anti-dezincification alloy. Stem, piston and spring in stainless steel. Membrane, stopper and O-Ring in EPDM. Fluids: water and glycol solutions (max. 50 % glycol). Temperature range 5÷120 °C. Room temperature range 1÷50 °C. Max. working pressure 25 bar. Max. working differential pressure: 4 bar. Working differential pressure range 25÷400 kPa with or without actuators. Working flow rate range: 600÷3500 l/h. Regulation accuracy ± 10 %.

Giacomini S.p.A.
Via per Alzo 39, 28017 San Maurizio d'Opaglio (NO) Italy
consulenza.prodotti@giacomini.com
+39 0322 923372 - giacomini.com

R206AY106
Pressure independent control valve (PICV). DN25 size, with G 1-1/4"M tail pieces main connections. Pressure outlet connections G 1/4"F with plug. Actuator connection M30 x 1,5 mm. Body and bonnet in DZR anti-dezincification alloy. Stem, piston and spring in stainless steel. Membrane, stopper and O-Ring in EPDM. Fluids: water and glycol solutions (max. 50 % glycol). Temperature range 5÷120 °C. Room temperature range 1÷50 °C. Max. working pressure 25 bar. Max. working differential pressure: 4 bar. Working differential pressure range 25÷400 kPa with or without actuators. Working flow rate range: 800÷4700 l/h. Regulation accuracy ± 10 %.

R206AY107
Pressure independent control valve (PICV). DN50 size, with G 1-1/2"M tail pieces main connections. Pressure outlet connections G 1/4"F with plug. Actuator connection M30 x 1,5 mm. Body and bonnet in DZR anti-dezincification alloy. Stem, piston and spring in stainless steel. Membrane, stopper and O-Ring in EPDM. Fluids: water and glycol solutions (max. 50 % glycol). Temperature range 5÷120 °C. Room temperature range 1÷50 °C. Max. working pressure 25 bar. Max. working differential pressure: 4 bar. Working differential pressure range 50÷400 kPa with or without actuators. Working flow rate range: 3000÷14000 l/h. Regulation accuracy ± 10 %.

R206AY108
Pressure independent control valve (PICV). DN50 size, with G 2"M tail pieces main connections. Pressure outlet connections G 1/4"F with plug. Actuator connection M30 x 1,5 mm. Body and bonnet in DZR anti-dezincification alloy. Stem, piston and spring in stainless steel. Membrane, stopper and O-Ring in EPDM. Fluids: water and glycol solutions (max. 50 % glycol). Temperature range 5÷120 °C. Room temperature range 1÷50 °C. Max. working pressure 25 bar. Max. working differential pressure: 4 bar. Working differential pressure range 50÷400 kPa with or without actuators. Working flow rate range: 3000÷14000 l/h. Regulation accuracy ± 10 %.

R206AMY103
Pressure independent control valve (PICV). DN15 sizes, with G 3/4"M threaded main connections. Pressure outlet connections G 1/4"F with plug. Actuator connection M30 x 1,5 mm. Body and bonnet in DZR anti-dezincification alloy. Stem, piston and spring in stainless steel. Membrane, stopper and O-Ring in EPDM. Fluids: water and glycol solutions (max. 50 % glycol). Temperature range 5÷120 °C. Room temperature range 1÷50 °C. Max. working pressure 25 bar. Max. working differential pressure: 8 bar (4 bar with R473/R473HE actuator). Working differential pressure range 25÷400 kPa with R473/R473HE actuator; 25÷800 kPa with K281-1 actuator or without actuator. Dual working flow rate range: 150÷380 l/h and 180÷630 l/h. Regulation accuracy ± 10 %.

R206AMY104
Pressure independent control valve (PICV). DN20 sizes, with G 1"M threaded main connections. Pressure outlet connections G 1/4"F with plug. Actuator connection M30 x 1,5 mm. Body and bonnet in DZR anti-dezincification alloy. Stem, piston and spring in stainless steel. Membrane, stopper and O-Ring in EPDM. Fluids: water and glycol solutions (max. 50 % glycol). Temperature range 5÷120 °C. Room temperature range 1÷50 °C. Max. working pressure 25 bar. Max. working differential pressure: 8 bar (4 bar with R473/R473HE actuator). Working differential pressure range 25÷400 kPa with R473/R473HE actuator; 25÷800 kPa with K281-1 actuator or without actuator. Dual working flow rate range: 320÷910 l/h and 700÷1175 l/h. Regulation accuracy ± 10 %.

R206AMY114
Pressure independent control valve (PICV). DN20 sizes, with G 1"M threaded main connections. Pressure outlet connections G 1/4"F with plug. Actuator connection M30 x 1,5 mm. Body and bonnet in DZR anti-dezincification alloy. Stem, piston and spring in stainless steel. Membrane, stopper and O-Ring in EPDM. Fluids: water and glycol solutions (max. 50 % glycol). Temperature range 5÷120 °C. Room temperature range 1÷50 °C. Max. working pressure 25 bar. Max. working differential pressure: 8 bar (4 bar with R473/R473HE actuator). Working differential pressure range 25÷400 kPa with R473/R473HE actuator; 25÷800 kPa with K281-1 actuator or without actuator. Dual working flow rate range: 290÷1000 l/h and 860÷1500 l/h. Regulation accuracy ± 10 %.

UNIT OF MEASUREMENT.
1 bar = 100 kPa
1 m^3/h = 1000 l/h = 16,7 l/min = 0,28 l/s

Safety Warning. Installation, commissioning and periodical maintenance of the product must be carried out by qualified operators in compliance with national regulations and/or local standards. A qualified installer must take all required measures, including use of Individual Protection Devices, for his and others' safety. An improper installation may damage people, animals or objects towards which Giacomini S.p.A. may not be held liable.

Package Disposal. Carton boxes: paper recycling. Plastic bags and bubble wrap: plastic recycling.

Additional information. For more information, go to giacomini.com or contact our technical assistance service. This document provides only general indications. Giacomini S.p.A. may change at any time, without notice and for technical or commercial reasons, the items included herewith. The information included in this technical sheet do not exempt the user from strictly complying with the rules and good practice standards in force.

Product Disposal. Do not dispose of product as municipal waste at the end of its life cycle. Dispose of product at a special recycling platform managed by local authorities or at retailers providing this type of service.

Giacomini S.p.A.
Via per Alzo 39, 28017 San Maurizio d'Opaglio (NO) Italy
consulenza.prodotti@giacomini.com
+39 0322 923372 - giacomini.com