R153P

Piston pressure reducer

Energy Management

Datasheet
0691EN 06/2023

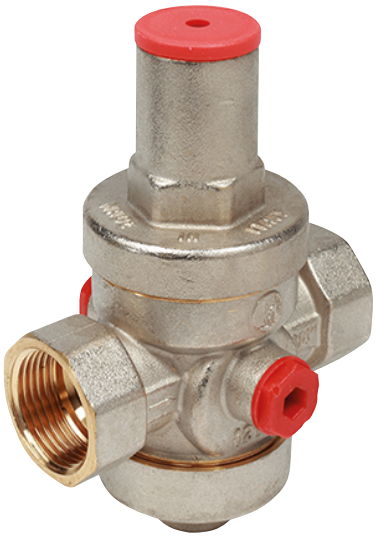

The piston-type pressure reducer R153P is an automatic valve that reduces and stabilizes the pressure of a fluid in a water distribution conduit according to a preset value.
The use of this hydraulic device is necessary if the maximum possible pressure at any point in the water distribution system can reach or exceed the relative maximum allowable working pressure, or if connectable to apparatus and equipment that function exclusively at lower levels of pressure.
The piston-type pressure reducer is designed for use in either internal or external water distribution systems, where the water main pressure values do not surpass 25 bar.
The thermoplastic material of the internal piston structure guarantees rigidity, strength and an enhanced regulation precision thanks to the compensated seat.
The O-Rings, in EPDM peroxide elastomer with a low coefficient of friction, are durable and require only limited maintenance interventions.
The internal finish of the body and the broader dimensions of the passage allow an elevated flow even with a minimal water draw.
The pressure reducer (PN 25) is used in air conditioning plants, irrigation systems, compressed air (not oil mist) distribution systems, fire suppression piping (it should be borne in mind that local government standards for fire protection must always be observed), and domestic water installations for water supply in buildings (according to EN 806-2 and EN 805).
This product adheres to the standards set forth by the European health authorities for the transport of alimentary fluids and potable water.

NOTE. The pressure gauge installed on the pressure reducer indicates the outlet fluid reduced pressure.

Giacomini S.p.A.
Via per Alzo 39, 28017 San Maurizio d'Opaglio (NO) Italia
consulenza.prodotti@giacomini.com
+39 0322 923372 - giacomini.com

Versions and product codes

PRODUCT CODE	CONNECTIONS
R153PX003	G 1/2"F
R153PX004	G 3/4"F
R153PX005	G 1"F
R153PX006	G 1-1/4"F
R153PX007	G 1-1/2"F
R153PX008	G 2"F

Accessories

- **R225Y002:** G 1/4"M rear connection pressure gauge, dial Ø 52 mm, scale 0÷10 bar

Technical data

Prestazioni

- Max. working pressure (PN): 25 bar
- Outlet pressure regulation range: from 1 to 5,5 bar
- Outlet pressure factory set: 3 bar
- Working temperature range: 0÷130 °C (no freezing)
- Compatible fluids: water, glycol solutions (max. 50 %), compressed air only for 1/2", 3/4", 1", 1-1/4", 1-1/2"
- Compliant with Standard EN 1567
- Sound class II - Lap [dB (A)] < 30

Materials

- Body: CW617N (UNI EN 12165) nickel plated brass
- Piston: technopolymer reinforced with glass fibre
- Gaskets: EPDM peroxide
- Seat: EN 10088 - 1.4305 stainless steel (AISI 303)
- Spring: EN10270-1 SM zinc plated steel

Flow rate diagrams

Rated water flow rate, relative to a speed of 2 m/s, for each diameter according to requirements of standard EN 1567.

PRODUCT CODE	CONNECTIONS	FLOW RATE [m³/h]	FLOW RATE [l/min]
R153PX003	G 1/2"F	1,27	21,16
R153PX004	G 3/4"F	2,27	37,83
R153PX005	G 1"F	3,6	60
R153PX006	G 1-1/4"F	5,8	96,66
R153PX007	G 1-1/2"F	9,1	151,66
R153PX008	G 2"F	14	233,33

Loss of pressure

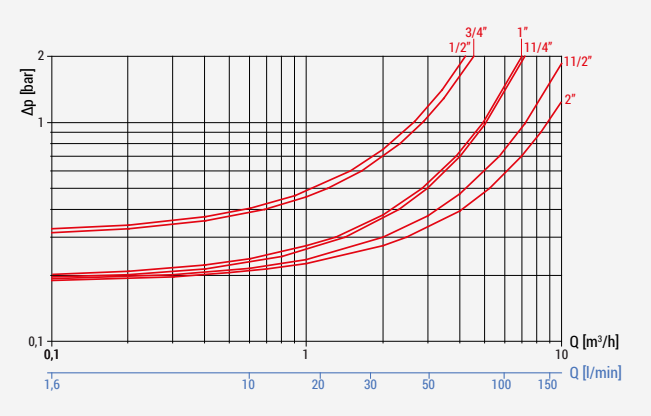

GIACOMINI
WATER E-MOTION

Giacomini S.p.A.
Via per Alzo 39, 28017 San Maurizio d'Opaglio (NO) Italia
consulenza.prodotti@giacomini.com
+39 0322 923372 - giacomini.com

Operation

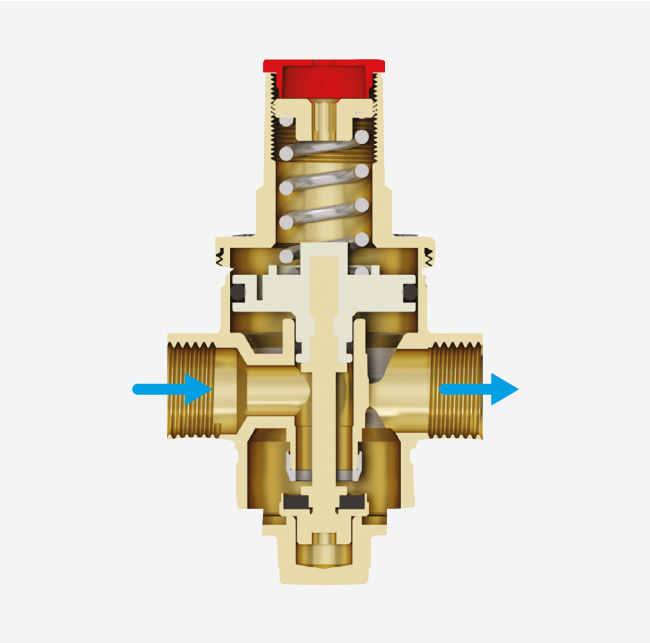

A piston actuates the stopper movement, as consequence from the two opposing forces: water pressure from the bottom in the pipe downstream from the reducer (which tends to close the valve), pushing from the top by an appropriately loaded spring in relation to the work pressure in play (tends to open the valve).
The valve opens when, following flow rate request, pressure beneath the piston decreases or spring pushing action prevails; valve opening is proportional to the instantaneous flow that crosses it.
Once the flow is shut, as soon as the water contained in the pipe downstream reaches a pressure able to overcome the pushing action of the return spring, the stopper rises to close the valve.
The regulation pressure is obtained by screwing the regulator that applies more or less compression to the spring.
The compensated seat that the Giacomini pressure reducers are equipped with, makes possible to keep set value steady even with strong inlet pressure variations: the upstream pressure pushes the stopper in the open position, but also pushes the compensation chamber pin in the opposite direction, obtaining a substantial balance.
The inserted seal seat, in stainless steel, guarantees long-term reliability and accuracy of the pressure reducer, even in the most extreme working conditions.

Installation

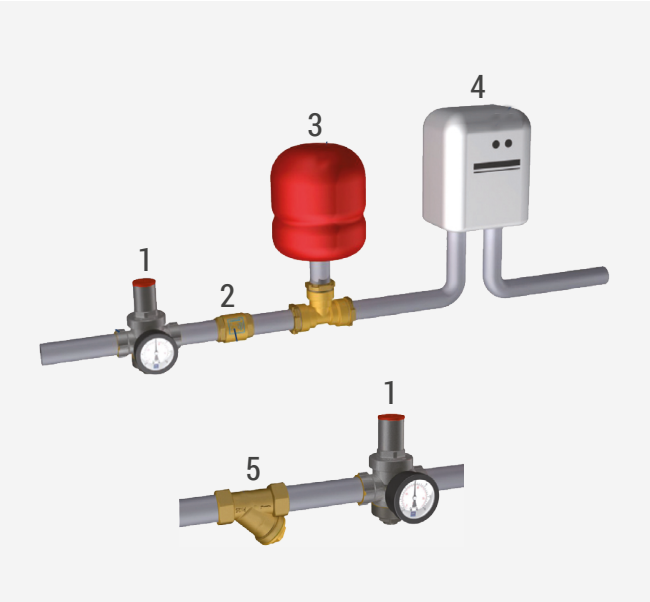

We recommend to install a filter before the reducer to eliminate all impurities in the water that may deposit onto the reducer seat and cause malfunctions.
When installing the pressure reducer at the inlet of boilers, hot water heaters, furnaces or hot water tanks, a plumbing expansion tank must be fitted after the reducer even if a check valve is already installed.

1	Pressure reducer, R153P
2	Disc check valve
3	Expansion tank
4	Boiler
5	Filter

Giacomini S.p.A.
Via per Alzo 39, 28017 San Maurizio d'Opaglio (NO) Italia
consulenza.prodotti@giacomini.com
+39 0322 923372 - giacomini.com

Dimensions

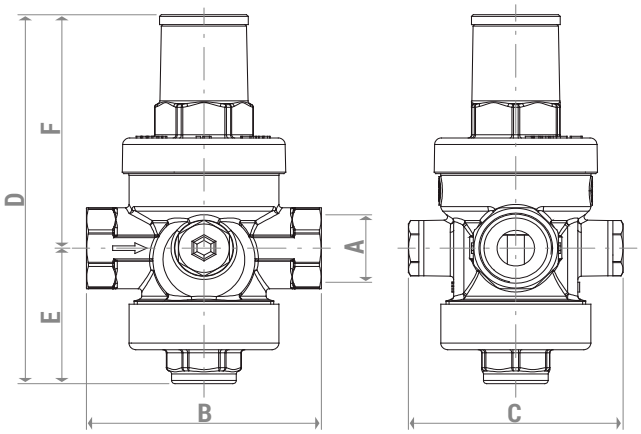

PRODUCT CODE	CONNEC-TIONS A	B [mm]	C [mm]	D [mm]	E [mm]	F [mm]
R153PX003	G 1/2"F	69	63	113,8	41,8	72
R153PX004	G 3/4"F	82	63	113,8	41,8	72
R153PX005	G 1"F	96	73	145,5	52,5	93
R153PX006	G 1-1/4"F	100	73	151,5	56,5	95
R153PX007	G 1-1/2"F	91	77	148	48	100
R153PX008	G 2"F	97	81	150	48	102

Product specifications

R153P

Piston pressure reducer with compensated seat in stainless steel compliant with standard EN 1567. Female-Female from G 1/2" to G 2" threaded connection. Rp 1/4" pressure gauge connection. Body in nickel-plated brass, technopolymer piston, EPDM gaskets. Compatible fluids: water, glycol solutions (max. 50 % of glycol), compressed air (only for 1/2", 3/4", 1", 1-1/4", 1-1/2"). Max. working temperature 130 °C. Max. working pressure 25 bar. Outlet pressure regulation range from 1 to 5,5 bar.

Safety Warning. Installation, commissioning and periodical maintenance of the product must be carried out by qualified operators in compliance with national regulations and/or local standards. A qualified installer must take all required measures, including use of Individual Protection Devices, for his and others' safety. An improper installation may damage people, animals or objects towards which Giacomini S.p.A. may not be held liable.

Package Disposal. Carton boxes: paper recycling. Plastic bags and bubble wrap: plastic recycling.

Additional information. For more information, go to giacomini.com or contact our technical assistance service. This document provides only general indications. Giacomini S.p.A. may change at any time, without notice and for technical or commercial reasons, the items included herewith. The information included in this technical sheet do not exempt the user from strictly complying with the rules and good practice standards in force.

Product Disposal. Do not dispose of product as municipal waste at the end of its life cycle. Dispose of product at a special recycling platform managed by local authorities or at retailers providing this type of service.

Giacomini S.p.A.
Via per Alzo 39, 28017 San Maurizio d'Opaglio (NO) Italia
consulenza.prodotti@giacomini.com
+39 0322 923372 - giacomini.com