R146CK, R146CK-1, R146CK-2

Kit of adjustable magnetic dirt separator equipped with accessories

Energy Management

Datasheet
1144EN 06/2025

R146CK R146CK-1 R146CK-2

PATENTED

Adjustable magnetic dirt separator kit equipped with accessories (shut-off ball valves, telescopic tail piece, flat seat fittings).
The adjustable magnetic dirt separator separates and removes debris inside hydraulic circuits of modern HVAC systems.
Impurities are separated by the combined action of water centrifugal force, a magnet and a metal filter.
They can be then discarded by the drain cock.
The special adjustable fitting enables to install the dirt separator under-boiler, on horizontal, vertical, angled and also 90°-angled pipes.

Giacomini S.p.A.
Via per Alzo 39, 28017 San Maurizio d'Opaglio (NO) Italia
consulenza.prodotti@giacomini.com
+39 0322 923372 - giacomini.com

Versions and product codes

SERIES	PRODUCT CODE		CONNECTIONS	INCLUDED COMPONENTS
R146CK		R146CKX004	G 3/4"M x G 3/4"F	• 3/4" magnetic dirt separator • Adjustable 3-way inlet/outlet fitting • Cap for inlet/outlet fitting • Ajdustable drain cock G 1/2"M x G 3/4"F • Magnet with brass housing • Shut-off ball valve with flat seat nut G 3/4"F x G 3/4"M • Adjustable tail piece with flat seat nut G 3/4"F x G 3/4"F
R146CK-1		R146CKX005	G 1"F x G 1"F	• 1" magnetic dirt separator • Adjustable 2-way inlet/outlet fitting • Ajdustable drain cock G 1/2"M x G 3/4"F • Magnet with brass housing • Nr.2 fittings with flat seat G 1-1/4"M x G 1"F
		R146CKX006	G 1-1/4"F x G 1-1/4"F	• 1" magnetic dirt separator • Adjustable 2-way inlet/outlet fitting • Ajdustable drain cock G 1/2"M x G 3/4"F • Magnet with brass housing • Nr.2 fittings with flat seat G 1-1/4"M x G 1-1/4"F
		R146CKX007	G 1-1/2"F x G 1-1/2"F	• 1" magnetic dirt separator • Adjustable 2-way inlet/outlet fitting • Ajdustable drain cock G 1/2"M x G 3/4"F • Magnet with brass housing • Nr.2 fittings with flat seat G 1-1/2"M x G 1-1/2"F
R146CK-2		R146CKX016	G 1-1/4"F x G 1-1/4"F	• 1" magnetic dirt separator • Adjustable 2-way inlet/outlet fitting • Ajdustable drain cock G 1/2"M x G 3/4"F • Magnet with brass housing • Nr.2 shut-off ball valves with extended T-handle and red plate G 1-1/4"M x G 1-1/4"F
		R146CKX017	G 1-1/2"F x G 1-1/2"F	• 1" magnetic dirt separator • Adjustable 2-way inlet/outlet fitting • Ajdustable drain cock G 1/2"M x G 3/4"F • Magnet with brass housing • Nr.2 shut-off ball valves with extended T-handle and red plate G 1-1/2"M x G 1-1/2"F

Giacomini S.p.A.
Via per Alzo 39, 28017 San Maurizio d'Opaglio (NO) Italia
consulenza.prodotti@giacomini.com
+39 0322 923372 - giacomini.com

Completion codes and spare parts

FOR DIRT SEPARATOR	COMPLETION CODES	SPARE PARTS CODES
R146CKX004	N/A	• **R146CX004:** 3/4" magnetic dirt separator • **R146CY002:** red magnet for 3/4" dirt separator, length 63 mm • **R594Y005:** tappo G 3/4"F • **R701X013:** adjustable drain cock G 1/2"M x G 3/4"F • **R254PY034:** shut-off ball valve with flat seat nut, G 3/4"F x G 3/4"M • **R176PY018:** adjustable tail piece with flat seat nut, G 3/4"F x G 3/4"F
R146CKX005	• **R146WY010:** insulation for dirt separator and adjustable fitting	• **R146CX005:** 1" magnetic dirt separator • **P146CY012:** red magnet for 1" dirt separator, length 80 mm • **R701X013:** adjustable drain cock G 1/2"M x G 3/4"F
R146CKX006	• **R146WY010:** insulation for dirt separator and adjustable fitting	• **R146CX005:** 1" magnetic dirt separator • **P146CY012:** red magnet for 1" dirt separator, length 80 mm • **R701X013:** adjustable drain cock G 1/2"M x G 3/4"F • **R191X006:** fitting with flat seat G 1-1/4"M x G 1-1/4"F
R146CKX007	• **R146WY010:** insulation for dirt separator and adjustable fitting	• **R146CX005:** 1" magnetic dirt separator • **P146CY012:** red magnet for 1" dirt separator, length 80 mm • **R701X013:** adjustable drain cock G 1/2"M x G 3/4"F • **R191X007:** fitting with flat seat G 1-1/2"M x G 1-1/2"F
R146CKX016	• **R146WY006:** insulation for dirt separator, adjustable fitting and ball valves	• **R146CX005:** 1" magnetic dirt separator • **P146CY012:** red magnet for 1" dirt separator, length 80 mm • **R701X013:** adjustable drain cock G 1/2"M x G 3/4"F • **R734TX006:** shut-off ball valve with extended T-handle and red plate G 1-1/4"M x G 1-1/4"F
R146CKX017	• **R146WY007:** insulation for dirt separator, adjustable fitting and ball valves	• **R146CX005:** 1" magnetic dirt separator • **P146CY012:** red magnet for 1" dirt separator, length 80 mm • **R701X013:** adjustable drain cock G 1/2"M x G 3/4"F • **R734TX007:** shut-off ball valve with extended T-handle and red plate G 1-1/2"M x G 1-1/2"F

Giacomini S.p.A.
Via per Alzo 39, 28017 San Maurizio d'Opaglio (NO) Italia
consulenza.prodotti@giacomini.com
+39 0322 923372 - giacomini.com

Technical data

Performance

- Fluid: water, glycol-based solutions (max. 50 % of glycol)
- Temperature range: 5÷90 °C
- Max. inlet pressure: 10 bar
- Filter: 300 µm
- Magnetic capacity: 13000 Gauss

NOTE. For use with higher temperatures and/or pressures, replace the drain cock with a brass plug (code R92X003).

Materials

- Dirt separator body, fittings, adjustable tail piece, shut-off ball valves: CW617N - EN 12165 brass
- 3-way inlet/outlet fitting (R146CK): CW617N - EN 12165 nickel plated brass
- 2-way inlet/outlet fitting (R146CK-1, R146CK-2): CB753S - EN 1982 nickel plated brass
- Cyclonic chamber: nylon 66 glass-filled 30 % (PA66GF30)
- Magnet: neodymium (N42H)
- Filter: AISI 304 stainless steel
- Gaskets: EPDM

Loss of pressure

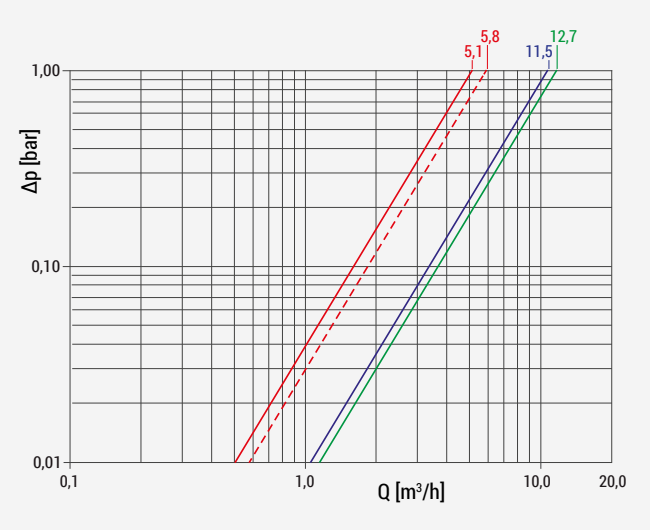

CONFIGURATION	CURVE ON THE GRAPH	Kv
IN-LINE PIPES		
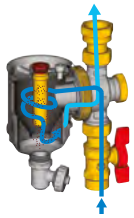	R146CKX004 (3/4")	5,1
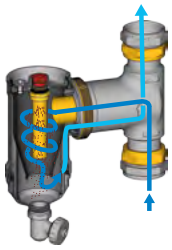	R146CKX005 (1") R146CKX006 (1-1/4")	11,5
	R146CKX007 (1-1/2")	12,7
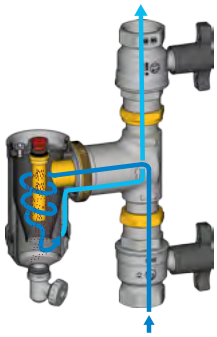	R146CKX016 (1-1/4")	11,5
	R146CKX017 (1-1/2")	12,7
90° - ANGLED PIPES		
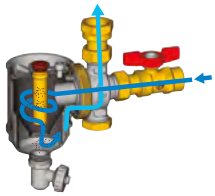	R146CKX004 (3/4")	5,8

GIACOMINI
WATER E-MOTION

Giacomini S.p.A.
Via per Alzo 39, 28017 San Maurizio d'Opaglio (NO) Italia
consulenza.prodotti@giacomini.com
+39 0322 923372 - giacomini.com

Components

R146CK

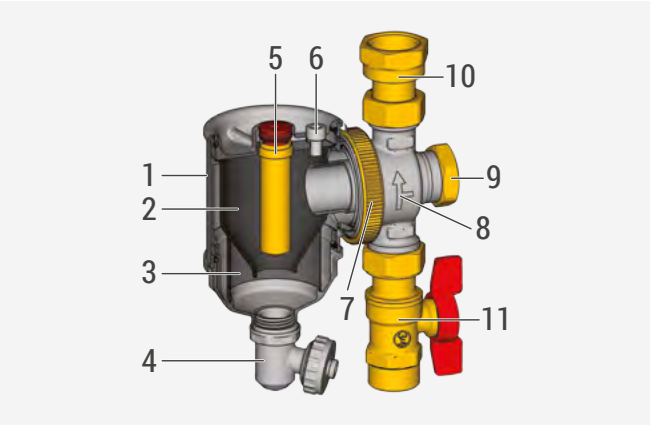

R146CK-1

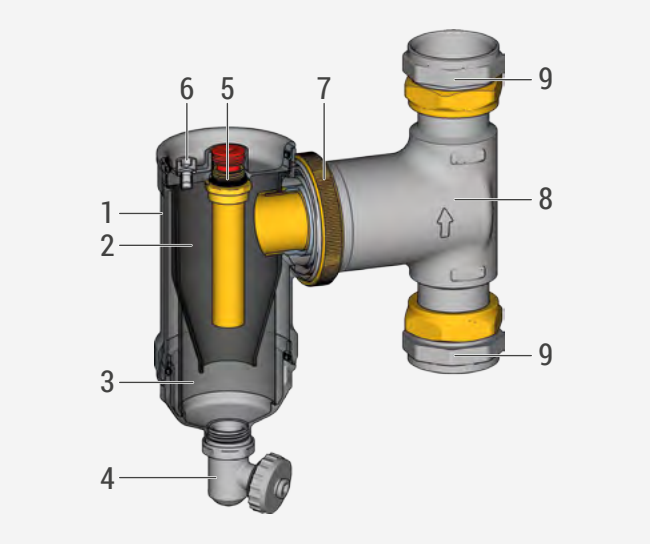

R146CK-2

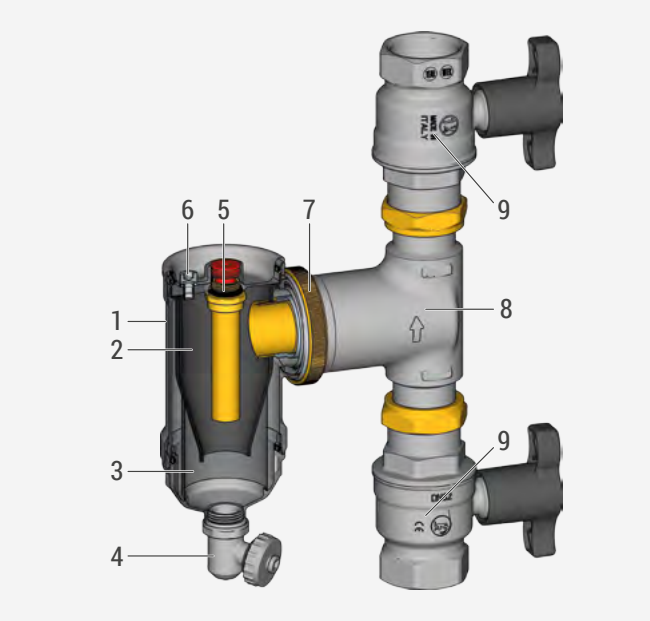

R146CK, R146CK-1, R146CK-2	
1	Dirt separator body
2	Cyclonic chamber
3	Filter
4	Adjustable drain cock
5	Magnet housing and magnet
6	Air vent screw
7	Fitting lock nut
R146CK	
8	Adjustable 3-way inlet/outlet fitting
9	Cap
10	Adjustable tail piece with flat seat
11	Shut-off ball valve with red T-handle
R146CK-1	
8	Adjustable 2-way inlet/outlet fitting
9	Fitting with female threaded connection
R146CK-2	
8	Adjustable 2-way inlet/outlet fitting
9	Shut-off ball valve with extended T-handle and red plate

Giacomini S.p.A.
Via per Alzo 39, 28017 San Maurizio d'Opaglio (NO) Italia
consulenza.prodotti@giacomini.com
+39 0322 923372 - giacomini.com

Operation

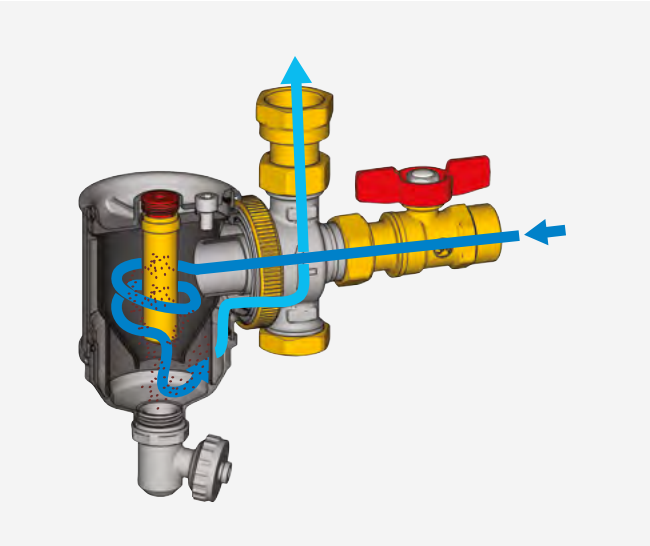

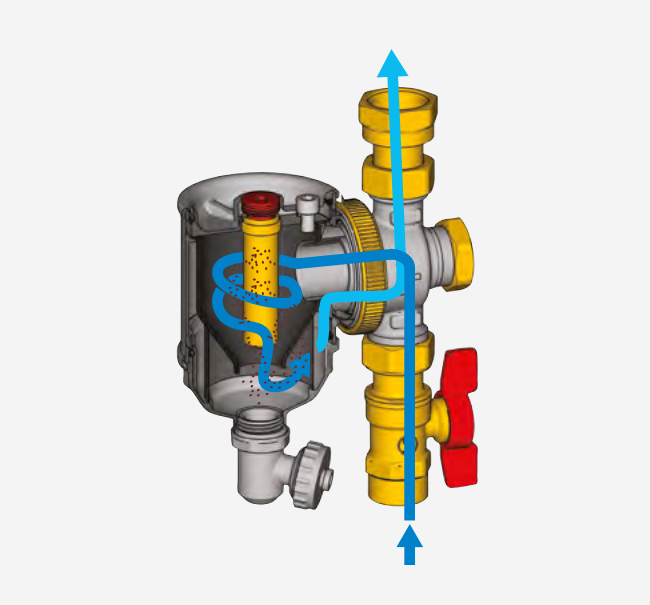

NOTE. Example images referring to the R146CKX004 kit.

DIRT SEPARATOR VIDEO TUTORIAL
Frame the QR code with your smartphone or tablet to view the video tutorial.

▬	Impure water flowing into the dirt separator
▬	Impurity-free water flowing out from the dirt separator

The water flows into the dirt separator and is then channeled into the cyclonic chamber where a vortical motion enhances particle separation; this area also features a magnet that retains metal impurities.
A metal filter below the cyclonic chamber holds the impurities decanting from the chamber itself on the bottom of the separator.
The dirt separator features a screw on top which releases air upon initial operation (see "Installation" paragraph).

The separator can be cleaned without being disassembled and/or switching off the system by opening the drain cock on the bottom of the separator (see "Maintenance" paragraph).

Giacomini S.p.A.
Via per Alzo 39, 28017 San Maurizio d'Opaglio (NO) Italia
consulenza.prodotti@giacomini.com
+39 0322 923372 - giacomini.com

Installation

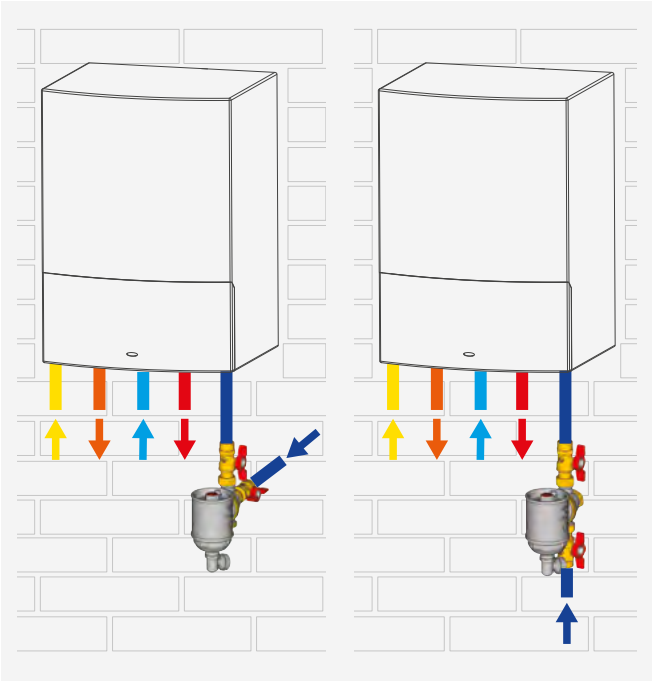

	Heating system return
	Heating system delivery
	Cold domestic water
	Hot domestic water
	Gas supply

In order to protect the boiler from the impurities in the heating system, the dirt separator kit must be installed on the return circuit.
The 3/4" version, thanks to its compact size, is suitable for installation under wall-mount boiler.
The 1", 1-1/4" and 1-1/2" versions, thanks to the greater water flow, are used in heat pump systems.
Leave a free space on the upper side of the separator, at least 50 mm, to easily remove the magnet.

NOTE. To facilitate maintenance operations, it is recommended to install a shut-off valve upstream and downstream of the dirt separator.

Loosen the ring nut (Components - Ref.7) to adjust the orientation of the outlet/inlet fitting (Components - Ref.8), place the fitting in the desired position and tight the ring nut.
Connect one inlet and the outlet of the inlet/outlet fitting to the heating system and screw the cap included with the dirt separator (only for 3/4"), on the unused inlet.
The main body should always be in vertical position with the drain facing down.

WARNING. The dirt separator is equipped with a magnet that causes magnetic fields, which may damage electronic devices (pacemakers included) near the circuit.

Air vent screw

On top of the dirt separator is a screw to vent air from the system during the start-up (Components - Ref.6).
Release the air by turning the screw in counterclockwise direction with a 5 mm Allen wrench.
Tighten the screw clockwise once the air has been removed.

Giacomini S.p.A.
Via per Alzo 39, 28017 San Maurizio d'Opaglio (NO) Italia
consulenza.prodotti@giacomini.com
+39 0322 923372 - giacomini.com

Maintenance

How to clean the dirt separator

During system operation, impurities collect on the surface of the magnet housing and on the bottom of the dirt separator. The dirt separator requires no shutting off and disassembling to be cleaned; **however we recommend carrying out these operations with no flow inside the dirt separator.**

To clean the separator and remove impurities, follow the steps below:

1) close the shut-off ball valves upstream and downstream the dirt separator;
2) pull out the magnet from its housing by unscrewing it in counterclockwise direction with a 5 mm Allen wrench; the impurities collected on the housing surface will deposit on the bottom of the separator;
3) after a few minutes, take the cap from the drain cock, and place it on the bottom of the cock, then rotate counterclockwise to open the drain cock and discharge the impurities in the dirt separator;
4) once the impurities have been removed, close the drain cock and reinsert the magnet in its housing, screwing it in clockwise direction;
5) open the shut-off ball valves upstream and downstream the dirt separator and restore the normal operation.

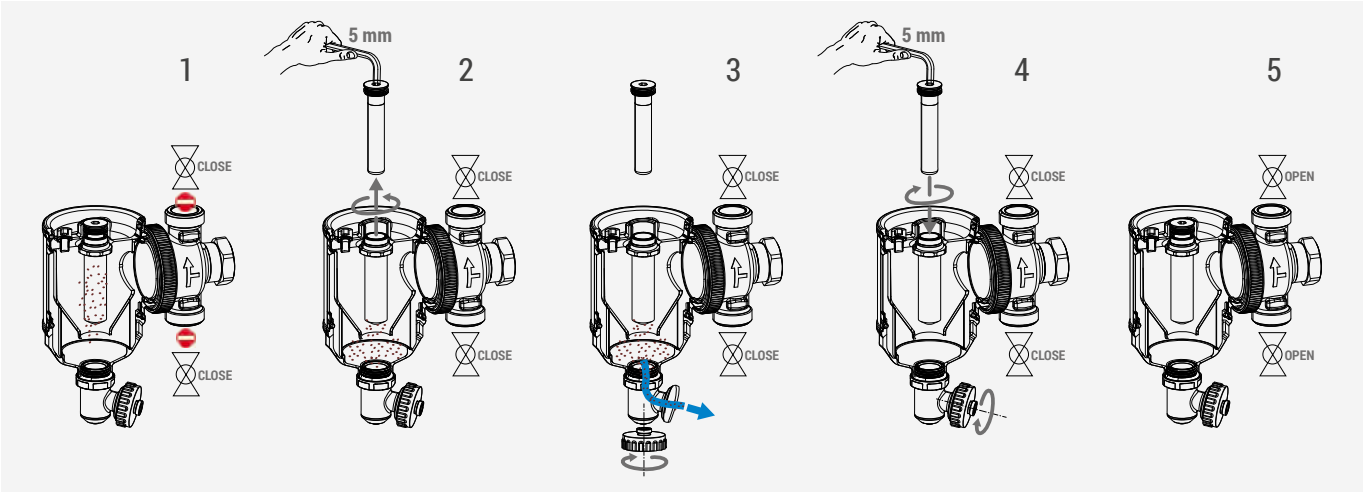

How to clean the metal filer

For a more thorough cleansing, proceed as follows:

1) turn off the system and close the shut-off ball valves upstream and downstream the dirt separator;
2) unscrew the dirt separator base in counterclockwise direction;
3) remove the filter from the dirt separator and wash it under running water;
4) fit the filter back in and screw the separator back on its base.
5) open the shut-off ball valves upstream and downstream the dirt separator and restore the normal operation.

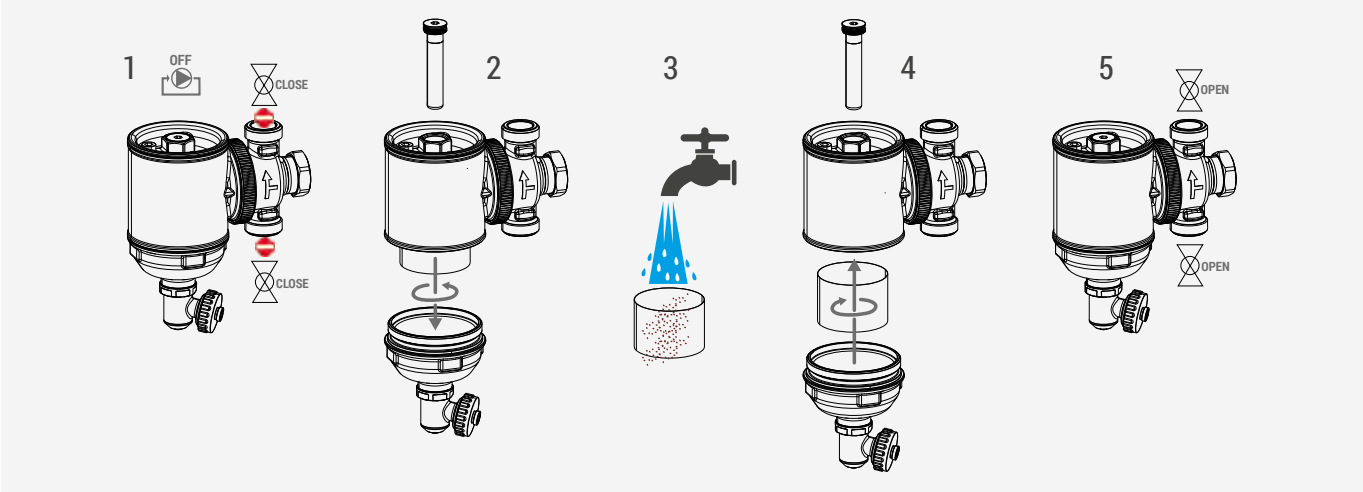

⚠ **WARNING.** Install an air vent valve on the system circuit to release the air after servicing and cleaning the components.

Giacomini S.p.A.
Via per Alzo 39, 28017 San Maurizio d'Opaglio (NO) Italia
consulenza.prodotti@giacomini.com
+39 0322 923372 - giacomini.com

Dimensions

R146CK

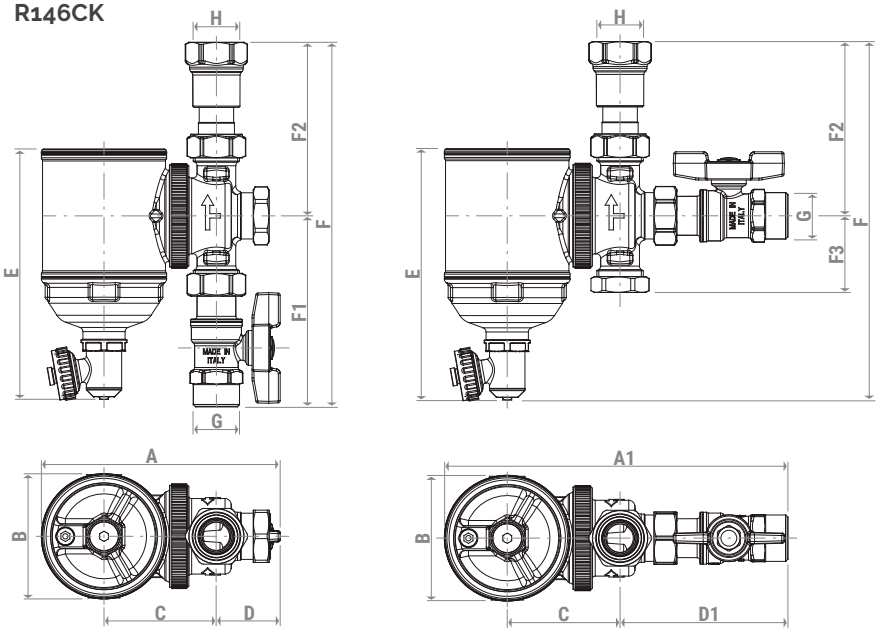

R146CK-1

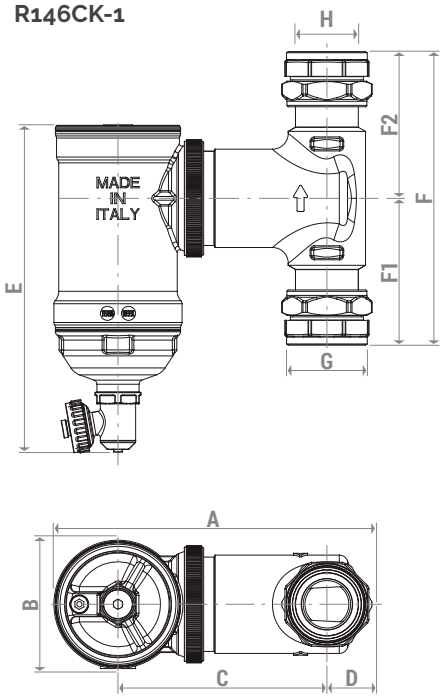

R146CK-2

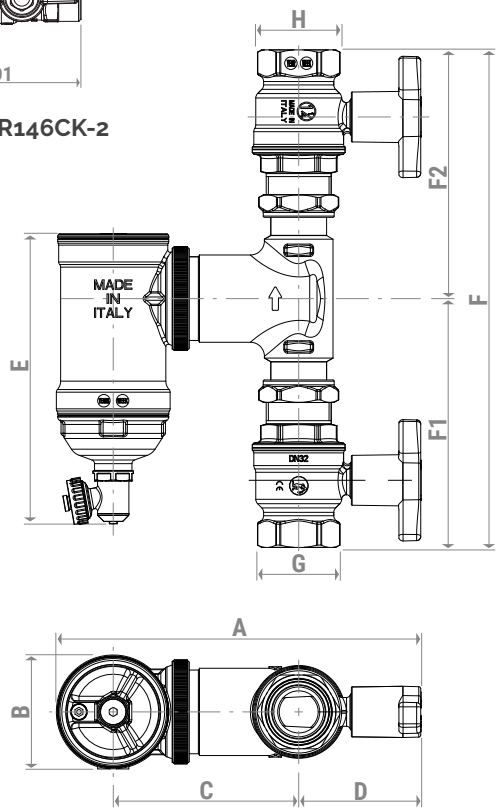

SERIES	PRODUCT CODE	A [mm]	A1 [mm]	B [mm]	C [mm]	D [mm]	D1 [mm]	E [mm]	F [mm]	F1 [mm]	F2 [mm]	F3 [mm]	G [mm]	H [mm]
R146CK	R146CKX004	136	195	71	64	36	95	143	208	109	99	44	G 3/4"M	G 3/4"F
R146CK-1	R146CKX005	181	-	73	119	26	-	187	176	88	88	-	G 1"F	G 1"F
	R146CKX006	181	-	73	119	26	-	187	168	84	84	-	G 1-1/4"F	G 1-1/4"F
	R146CKX007	190	-	73	125	29	-	187	176	88	88	-	G 1-1/2"F	G 1-1/2"F
R146CK-2	R146CKX016	234	-	73	119	79	-	187	320	160	160	-	G 1-1/4"F	G 1-1/4"F
	R146CKX017	267	-	73	125	106	-	187	336	168	168	-	G 1-1/2"F	G 1-1/2"F

Giacomini S.p.A.
Via per Alzo 39, 28017 San Maurizio d'Opaglio (NO) Italia
consulenza.prodotti@giacomini.com
+39 0322 923372 - giacomini.com

Product specifications

R146CKX004
Dirt separator equipped with 3-way inlet/outlet fitting, shut-off ball valve with flat seat nut G 3/4"F x G 3/4"M, adjustable tail piece with flat seat nut G 3/4"F x G 3/4"F, G 3/4"F cap, adjustable drain cock and brass magnet holder. Dirt separator, shut-off ball valve and adjustable tail piece: CW617N brass. Cyclonic chamber made of high-strength synthetic material. Filter: AISI 304 stainless steel. Magnet: neodymium (N42H). Magnetic capacity: 13000 Gauss. Gaskets: EPDM. Temperature range: 5÷90 °C. Max. inlet pressure: 10 bar. Fluid: water, glycol-based solutions (max. 50 % of glycol).

R146CKX005
Dirt separator equipped with 2-way inlet/outlet fitting, nr.2 fittings with flat seat G 1-1/4"M x G 1"F, adjustable drain cock and brass magnet holder. Dirt separator and fittings: CW617N brass. Cyclonic chamber made of high-strength synthetic material. Filter: AISI 304 stainless steel. Magnet: neodymium (N42H). Magnetic capacity: 13000 Gauss. Gaskets: EPDM. Temperature range: 5÷90 °C. Max. inlet pressure: 10 bar. Fluid: water, glycol-based solutions (max. 50 % of glycol).

R146CKX006
Dirt separator equipped with 2-way inlet/outlet fitting, nr.2 fittings with flat seat G 1-1/4"M x G 1-1/4"F, adjustable drain cock and brass magnet holder. Dirt separator and fittings: CW617N brass. Cyclonic chamber made of high-strength synthetic material. Filter: AISI 304 stainless steel. Magnet: neodymium (N42H). Magnetic capacity: 13000 Gauss. Gaskets: EPDM. Temperature range: 5÷90 °C. Max. inlet pressure: 10 bar. Fluid: water, glycol-based solutions (max. 50 % of glycol).

R146CKX007
Dirt separator equipped with 2-way inlet/outlet fitting, nr.2 fittings with flat seat G 1-1/2"M x G 1-1/2"F, adjustable drain cock and brass magnet holder. Dirt separator and fittings: CW617N brass. Cyclonic chamber made of high-strength synthetic material. Filter: AISI 304 stainless steel. Magnet: neodymium (N42H). Magnetic capacity: 13000 Gauss. Gaskets: EPDM. Temperature range: 5÷90 °C. Max. inlet pressure: 10 bar. Fluid: water, glycol-based solutions (max. 50 % of glycol).

R146CKX016
Dirt separator equipped with 2-way inlet/outlet fitting, nr.2 shut-off ball valves with extended T-handle and red plate G 1-1/4"M x G 1-1/4"F, adjustable drain cock and brass magnet holder. Dirt separator, shut-off ball valves: CW617N brass. Cyclonic chamber made of high-strength synthetic material. Filter: AISI 304 stainless steel. Magnet: neodymium (N42H). Magnetic capacity: 13000 Gauss. Gaskets: EPDM. Temperature range: 5÷90 °C. Max. inlet pressure: 10 bar. Fluid: water, glycol-based solutions (max. 50 % of glycol).

R146CKX017
Dirt separator equipped with 2-way inlet/outlet fitting, nr.2 shut-off ball valves with extended T-handle and red plate G 1-1/2"M x G 1-1/2"F, adjustable drain cock and brass magnet holder. Dirt separator, shut-off ball valves: CW617N brass. Cyclonic chamber made of high-strength synthetic material. Filter: AISI 304 stainless steel. Magnet: neodymium (N42H). Magnetic capacity: 13000 Gauss. Gaskets: EPDM. Temperature range: 5÷90 °C. Max. inlet pressure: 10 bar. Fluid: water, glycol-based solutions (max. 50 % of glycol).

Safety Warning. Installation, commissioning and periodical maintenance of the product must be carried out by qualified operators in compliance with national regulations and/or local standards. A qualified installer must take all required measures, including use of Individual Protection Devices, for his and others' safety. An improper installation may damage people, animals or objects towards which Giacomini S.p.A. may not be held liable.

Package Disposal. Carton boxes: paper recycling. Plastic bags and bubble wrap: plastic recycling.

Additional information. For more information, go to giacomini.com or contact our technical assistance service. This document provides only general indications. Giacomini S.p.A. may change at any time, without notice and for technical or commercial reasons, the items included herewith. The information included in this technical sheet do not exempt the user from strictly complying with the rules and good practice standards in force.

Product Disposal. Do not dispose of product as municipal waste at the end of its life cycle. Dispose of product at a special recycling platform managed by local authorities or at retailers providing this type of service.

Giacomini S.p.A.
Via per Alzo 39, 28017 San Maurizio d'Opaglio (NO) Italia
consulenza.prodotti@giacomini.com
+39 0322 923372 - giacomini.com