R145XC

Compact magnetic filter-dirt separator

Energy Management

Datasheet
1065EN 03/2026

PATENTED

The R145XC magnetic filter-dirt separator removes impurities from the hydraulic circuits of modern HVAC systems.
The impurities are separated by the combined action of a magnet and a metal filter, and they can then be disposed of by removing the plastic cover.
The filter-dirt separator includes a shut-off valve and a check valve to make cleaning easier without draining the system.
The special fitting with dual inlet enables to install the filter-dirt separator under wall-mount boilers or on any linear piping (horizontal, vertical or angled).

Versions and product codes

PRODUCT CODE	CONNECTIONS
R145XC004	Main body: - boiler circuit: G 3/4"M - system return circuit: G 3/4"M Tail piece: G 3/4"F x G 3/4"F

Components included with the R145XC filter-dirt separator
- G 3/4"F cap for inlet-outlet fitting
- G 3/4"F x G 3/4"F tail piece

Spare parts
- **P145XCY001**: neodymium magnet
- **P145XCY002**: stainless steel filter

GIACOMINI WATER E-MOTION

Giacomini S.p.A.
Via per Alzo 39, 28017 San Maurizio d'Opaglio (NO) Italia
consulenza.prodotti@giacomini.com
+39 0322 923372 - giacomini.com

Technical data

- Fluid: water, glycol-based solution (max. 50 % of glycol)
- Temperature range: 5÷90 °C
- Max working pressure: 3 bar
- Filter: 800 µm
- Magnetic capacity of magnet: 13000 Gauss

Materials

- Main body, ball valve and inlet/outlet fittings: CW617N - UNI EN12165 chrome-plated brass
- Mini lever valve in white varnished aluminum
- Filter cartridge: 20 % glass-filled 66 nylon (PA66-GF20)
- Filter: AISI 304 stainless steel
- Check valve: POM
- Gaskets: EPDM
- Magnet: neodymium (N42H)

Losses of pressure

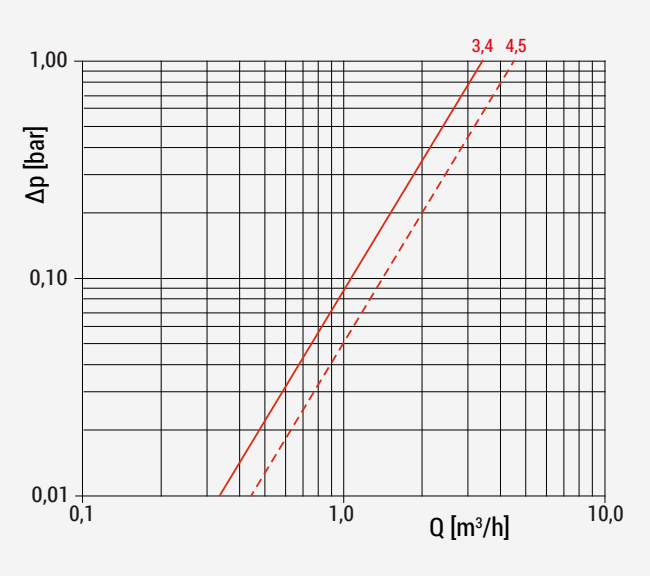

LAYOUT	CURVE ON DIAGRAM	Kv
In-line pipes 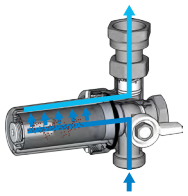	———	3,4
90°-angled pipes 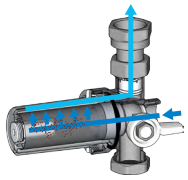	- - - -	4,5

Components

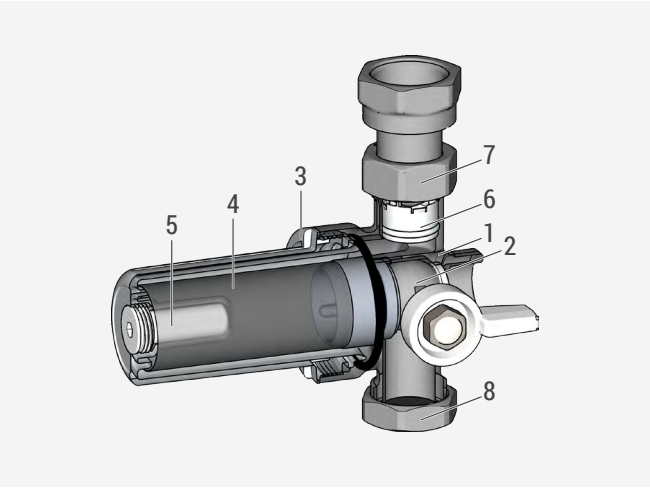

1	Dirt separator body
2	Ball valve with white mini lever
3	Filter cartridge
4	Filter
5	Magnet
6	Check valve
7	Tail piece
8	Cap

GIACOMINI WATER E-MOTION

Giacomini S.p.A.
Via per Alzo 39, 28017 San Maurizio d'Opaglio (NO) Italia
consulenza.prodotti@giacomini.com
+39 0322 923372 - giacomini.com

Operation

The water flow enters the filter-dirt separator from the selected inlet (the unused inlet must be closed with the cap included) and then through a filter that enhances the particle separation; a magnet is also provided to retain metal impurities.
The filter includes a shut-off ball valve and a check valve that enable to isolate it completely from the rest of the components and clean it without draining the system.
By turning the handle, the ball valve goes into the maintenance position, preventing the water from entering the device.

Operation with in-line flow

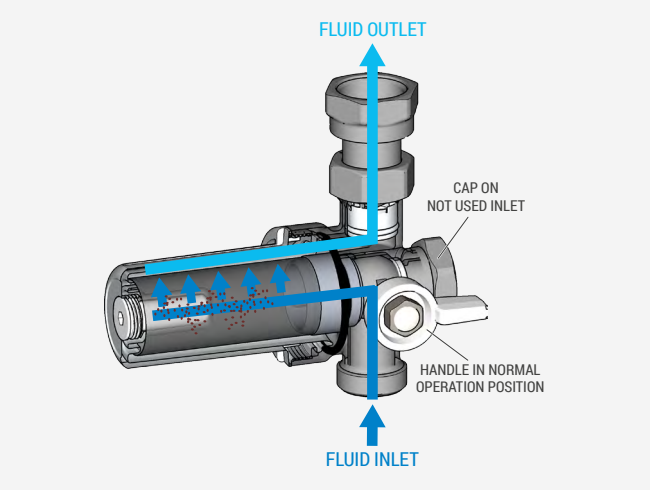

Operation with 90°-angled flow

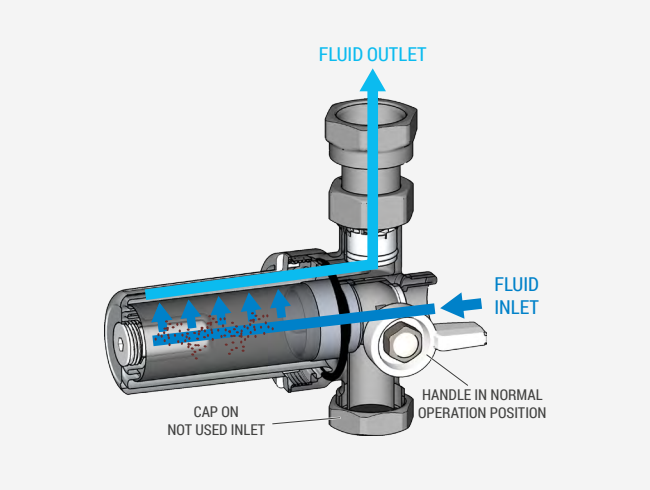

Shut-off flow

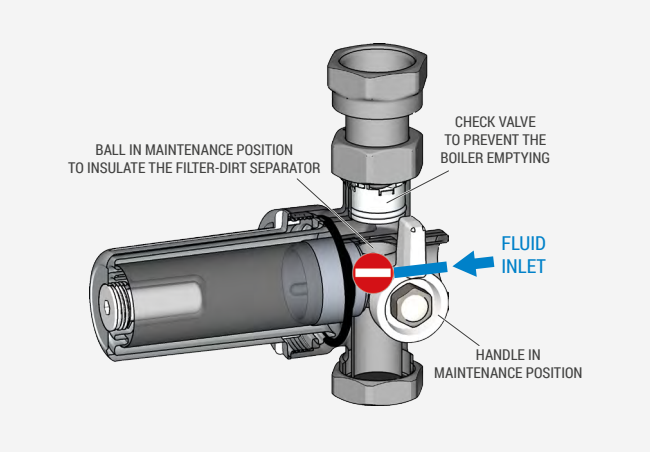

▬	Fluid filled with impurities entering the filter-dirt separator
▬	Fluid released from the filter-dirt separator with no impurities

Giacomini S.p.A.
Via per Alzo 39, 28017 San Maurizio d'Opaglio (NO) Italia
consulenza.prodotti@giacomini.com
+39 0322 923372 - giacomini.com

Installation

⚠ **WARNING.** Before installing the filter, check the system working conditions, such as pressure and temperature, to make sure they are within the working range. Access to the filter must be free to perform maintenance.

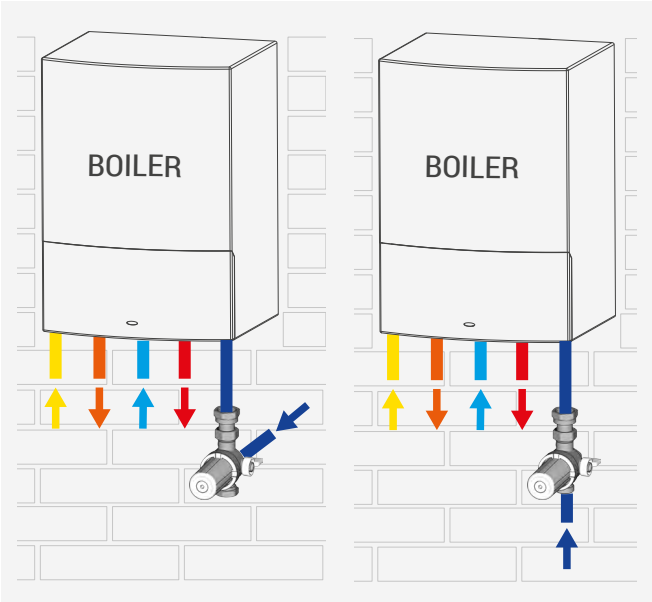

	Heating return circuit
	Heating delivery circuit
	Domestic cold water
	Domestic hot water
	Gas adduction

The filter-dirt separator should be installed on the heating return circuit to protect the boiler from the impurities inside the pipes.
Its compact dimensions makes it fit for installation right under wall-mount boilers.

Before starting up the system, the unused inlet of the filter-dirt separator must be closed with the included cap.

The package also contains a G 3/4"F tail piece to connect the filter outlet directly to the wall-mount boiler.

The filter-dirt separator can be placed in any position, but the cartridge must never point upwards.

⚠ **WARNING.** The filter-dirt separator is provided with a magnet that generates magnetic fields that may damage electronic devices (including pacemakers) nearby.

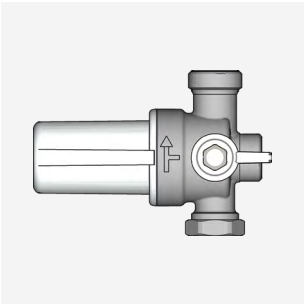

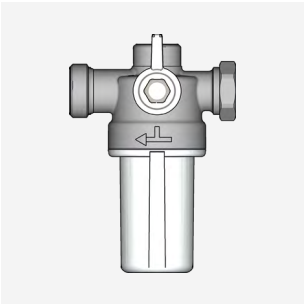

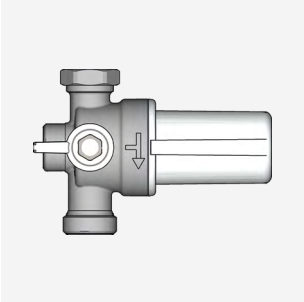

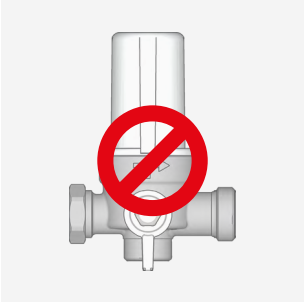

Use of the filter-dirt separator as a regular filter for heating/cooling systems
When used in a linear flow (see "Operation"), the device works as a regular filter for heating/cooling systems.

Giacomini S.p.A.
Via per Alzo 39, 28017 San Maurizio d'Opaglio (NO) Italia
consulenza.prodotti@giacomini.com
+39 0322 923372 - giacomini.com

Maintenance

Cleaning the filter-dirt separator

Impurities collect inside the filter-separator when the system is ON.
There is no need to drain the system, but the **device must be empty to clean the filter (system OFF)**.

To clean the filter and remove the impurities, follow the steps below:

1) turn OFF the system, turn the handle of the shut-off ball valve to move it to the maintenance position and isolate the device from the rest of the system;
2) remove the magnet from the cartridge by rotating it in counterclockwise direction with a 5-mm Allen wrench; the ferrous debris collected will rest inside the filter-dirt separator;
3) after a few minutes, screw out the cartridge and remove the filter;
4) rinse the disassembled components (filter, cartridge and magnet) under fresh water;
5) make sure to fit the O-ring in the proper seat and, if necessary, lubricate it with an adequate lubricant;
6) reassemble the clean components inside the device;
7) turn the handle of the shut-off ball valve to move it to the normal operating position, before turning the system back ON.

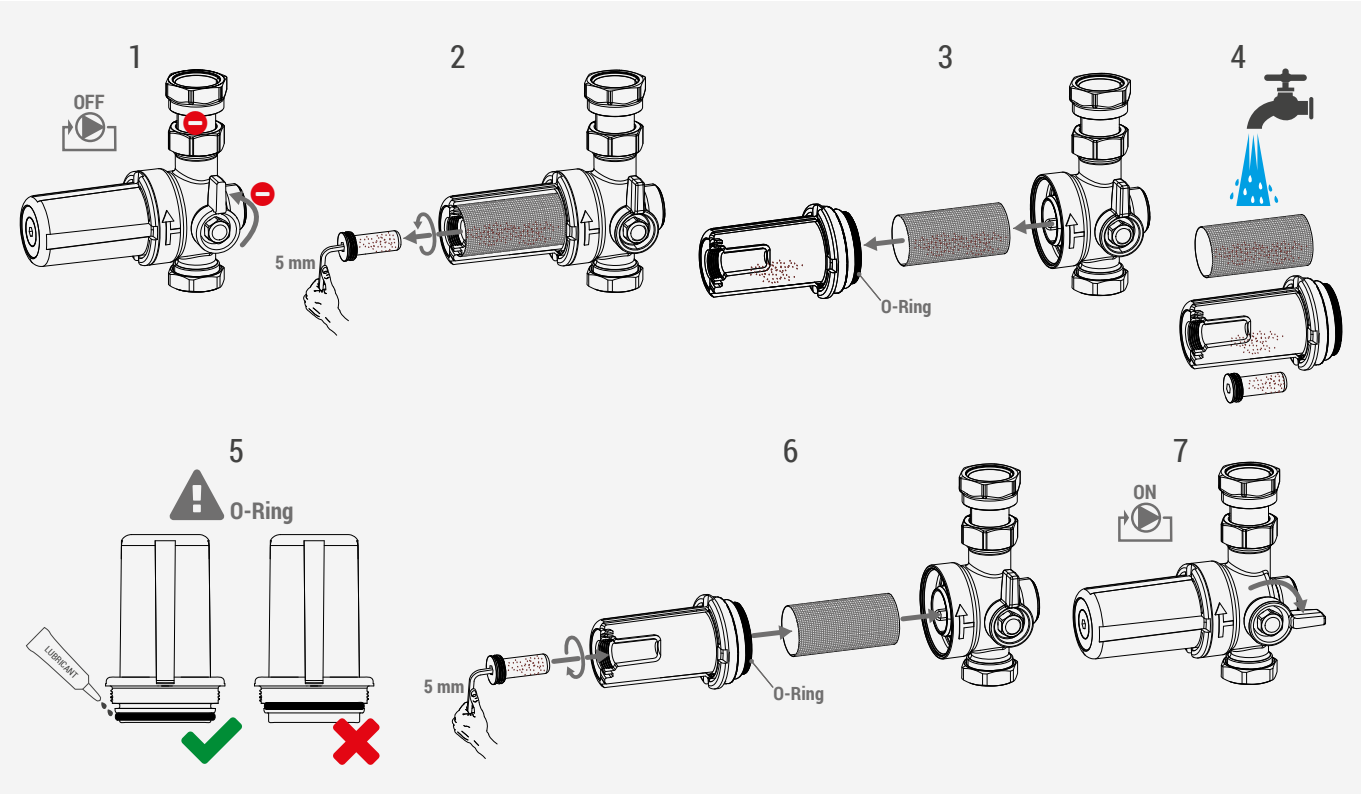

⚠ **WARNING.** Install an air vent valve on the system circuit to release the air after servicing and cleaning the components.

Giacomini S.p.A.
Via per Alzo 39, 28017 San Maurizio d'Opaglio (NO) Italia
consulenza.prodotti@giacomini.com
+39 0322 923372 - giacomini.com

Dimensions

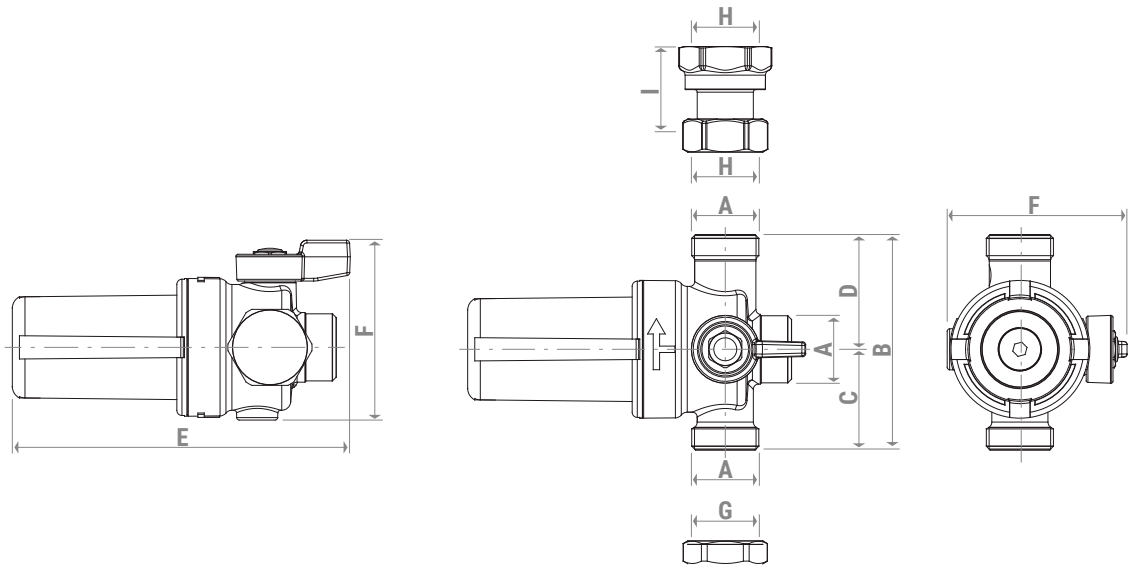

PRODUCT CODE	A [mm]	B [mm]	C [mm]	D [mm]	E [mm]	F [mm]	G [mm]	H [mm]	I [mm]	B+I [mm]
R145XC004	G 3/4"M	85	40	45	133	70	G 3/4"F	G 3/4"F	33	118

Product specifications

R145XC

Compact magnetic filter-dirt separator. EN 12165 CW617N chrome-plated brass body, built-in ball and tail piece. Boiler circuit connections G 3/4"M, system return circuit connections G 3/4" M, tail piece G 3/4"F x G 3/4"F. EPDM gaskets. Filter cartridge: 20 % glass-filled 66 nylon (PA66-GF20). AISI 304 stainless steel 800 µm filter with a magnetic capacity of 13000 Gauss. Mini lever valve made with white varnished aluminum. Fluid: water, glycol-based solution (max. 50 % of glycol). Temperature range: 5÷90 °C. Max working pressure: 3 bar.

Safety Warning. Installation, commissioning and periodical maintenance of the product must be carried out by qualified operators in compliance with national regulations and/or local standards. A qualified installer must take all required measures, including use of Individual Protection Devices, for his and others' safety. An improper installation may damage people, animals or objects towards which Giacomini S.p.A. may not be held liable.

Package Disposal. Carton boxes: paper recycling. Plastic bags and bubble wrap: plastic recycling.

Additional information. For more information, go to giacomini.com or contact our technical assistance service. This document provides only general indications. Giacomini S.p.A. may change at any time, without notice and for technical or commercial reasons, the items included herewith. The information included in this technical sheet do not exempt the user from strictly complying with the rules and good practice standards in force.

Product Disposal. Do not dispose of product as municipal waste at the end of its life cycle. Dispose of product at a special recycling platform managed by local authorities or at retailers providing this type of service.

Giacomini S.p.A.
Via per Alzo 39, 28017 San Maurizio d'Opaglio (NO) Italia
consulenza.prodotti@giacomini.com
+39 0322 923372 - giacomini.com