K493TW

Radiant Systems

Energy Management

Datasheet
1117EN 04/2025

Chronothermostat touch screen, Wi-Fi, with temperature and humidity probe, ModBus connection

Chronothermostat with touch screen, Wi-Fi and ModBus connection, to control temperature and humidity when combined to the KPM22 or KPM30 electronic controller.
Designed for semi-flush installation in Italian-standard 3-module boxes or exposed wall mounting.
It can control directly a 0..10 V fan coil or a 3-speed fan coil when combined to the KF201 control module.
Heating and cooling can bet set with a weekly/daily program or manually, and managed from remote through the dedicated K-Domo App.

Versions and product codes

PRODUCT CODE	POWER SUPPLY	FUNCTION
K493TWY002	12 Vdc	0..10 V fan coil direct control or 3-speed fan coil combined to KF201 control module

Completion codes
- **KPM22:** electronic electronic for HVAC systems
- **KPM30:** KLIMAbus electronic electronic for HVAC systems

Dedicated App
- **K-DOMO:** app for control of Wi-Fi chronothermostat also from remote

APP K-DOMO PLAY STORE

APP K-DOMO APPLE STORE

Technical data

- Power supply: 12 Vdc
- Absorption: 65 mA, max 120mA
- Communication protocol: Bus RS485 ModBus RTU
- Horizontal installation on wall or 3-module boxes
- Working temperature range: 5÷50 °C
- Temperature sensor: 5÷50 °C / ±0,5 °C
- Relative humidity sensor: 20÷80 % / ±5 %
- Protection class: IP10
- 2,8" TFT color display
- Wi-Fi Protocol: 802.11 b/g/n
- Dimensions: 121 x 94 x 19 mm (L x H x W)
- Weight: 187 g

NOTE. Wireless device complying with 802.11 b/g/n standard, frequency 2.4-2.4835 GHz. Transmission power < 20 dBm. Safety protocol WPA/WPA2.

GIACOMINI WATER E-MOTION

Giacomini S.p.A.
Via per Alzo 39, 28017 San Maurizio d'Opaglio (NO) Italy
consulenza.prodotti@giacomini.com
+39 0322 923372 - giacomini.com

Home screen description

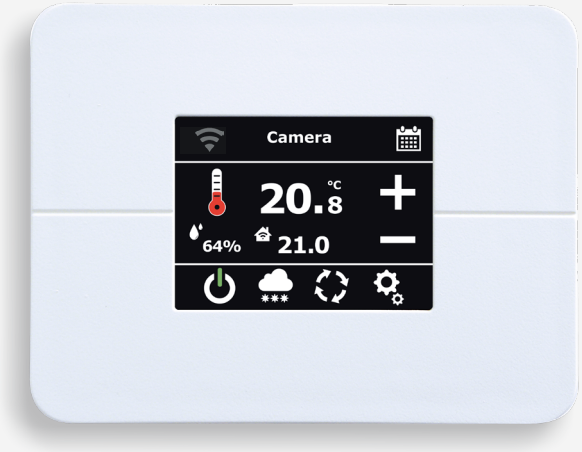

The home screen displays the zone name on top.
The detected temperature is shown at the center, and right under is the temperature setting (Set-Point temperature).
The relative humidity is displayed on the left.

	The WiFi status is shown in the upper left corner: • Grey when the Wi-Fi card is Off. • White when the Wi-Fi is On and the chronothermostat is connected to the configured network. • Yellow when the Wi-Fi and network are both On. • Red when the Wi-Fi is On but connection to the network fails.
	This icon flashes in the upper left corner when syncing with the chronothermostat network is in progress.
	This icon flashes in the upper left corner when one or more updates are available.
	This icon in the upper left corner means that the WiFi is attempting to reconnect.
	This icon flashes in the upper left corner when update downloading is in progress.
	Use this icon to access and modify the chronoprogram of the current program.
	Use these icons to change the Set-Point temperature. Operation will then switch to temporary manual control.
	AUTOMATIC CONTROL. This icon means that the chronothermostat is setting the temperatures based on its time settings.
	TEMPORARY MANUAL CONTROL. This icon means that a Set-Point temperature remains constant up to the next time-setting change of the chronoprogram. Press it once for manual control.
	MANUAL CONTROL. This icon means there is a temperature Set-Point that remains constant for every time of the day. Press it once to restore automatic control.

	This icon means that the chronothermostat is On. Press it once to go to the control-selection screen.
	This icon means that the chronothermostat is Off. Press it once to go to the control-selection screen.
	This icon means that the chronothermostat anti-freeze function is On. Press it once to go to the control-selection screen.
	Summer program in progress. Press this icon once to go to the program-selection screen.
	Winter program in progress. Press this icon once to go to the program-selection screen.
	Program number 1 in progress. Press this icon once to go to the program-selection screen.
	Use this icon to access the setting screen.
	A white icon means that the Set-Point temperature entered has been reached. A red or blue icon means that heating or cooling is respectively activated in the zone to reach the Set-Point.
	These icons replace the symbols from the previous point when the chronothermostat controls a fan coil or another 3-speed device.
	White: Humidity Set-Point not reached Blue: dehumidifier ON Red: anti-condensation function ON

Giacomini S.p.A.
Via per Alzo 39, 28017 San Maurizio d'Opaglio (NO) Italy
consulenza.prodotti@giacomini.com
+39 0322 923372 - giacomini.com

Installation

⚠ **WARNING**. Installation and maintenance should be carried out by a professional operator with power Off.

The device must be installed on indoor walls, away from heat sources, at 1,5 m from the floor and in a convenient position to read the room temperature correctly.
It can be installed on wall or 3-module boxes.
Use in dry rooms free of dust at a temperature between 5° C and 50° C.

1) Remove the two side brackets to install the device on a 3-module box.

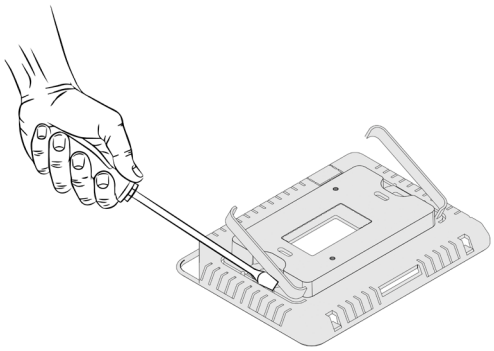

2) Fit the device on a 3-module box after wiring.

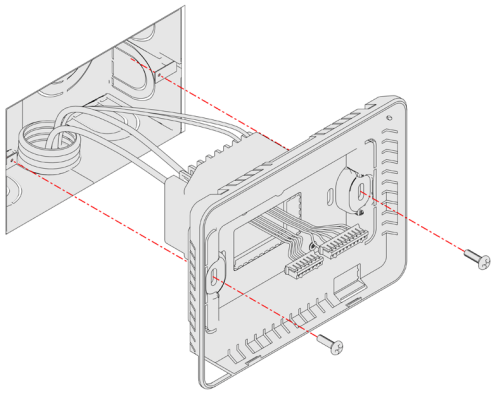

3) Connect the add-on module connectors to the display as shown.

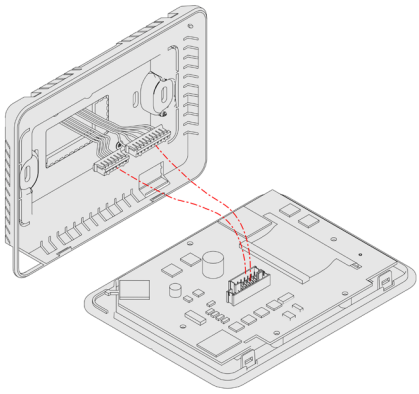

4) Install the display on the back of the device according to the numbers shown.

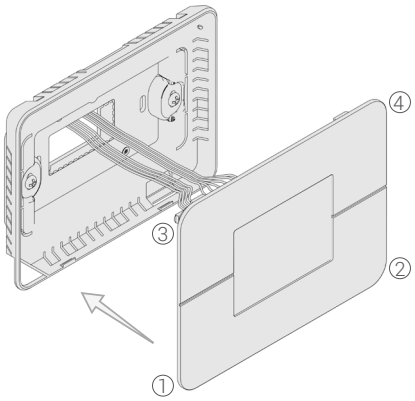

5) If necessary, open the device with a screwdriver.

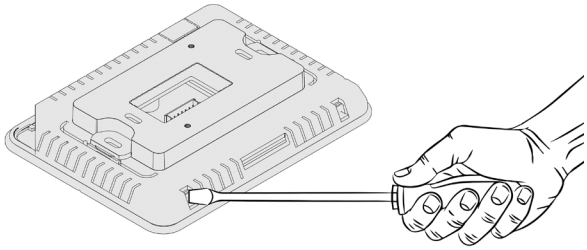

Giacomini S.p.A.
Via per Alzo 39, 28017 San Maurizio d'Opaglio (NO) Italy
consulenza.prodotti@giacomini.com
+39 0322 923372 - giacomini.com

Electric connections

⚠ **WARNINGS.** Installation and maintenance should be performed by qualified operators only.
Shut down the electric power before maintenance, assembly and access to the unit internal parts.
Use an AWG 20/22 shielded wire for serial connection.
The bus must feature an "in-out" wiring. The network length should not exceed 500 m.
Install a 120 Ω resistance between RX/RT+ and RX/RT- of the first and last element connected to the bus network.
The bus wire should be inserted in dedicated sleeves, separated and spaced out from the power wires.

Connections

KPM30 BUS	FAN COIL BUS
GND (white/black) V-	0 V (blue/black) **for Giacomini fan coils: GND**
B (white/purple) RT-	10 V (brown/black) **for Giacomini fan coils: Y**
A (white/blue) RT+	12 Vdc (pink)
+12 (orange) V+	TxRx+ (grey/white)
	TxRx- (red/white)
	-(G0) (black/white)

Connect the sensor to the Bus RS485 ModBus RTU connection cable according to the indications of the terminal.

Control of the fan coil with 0..10 V command

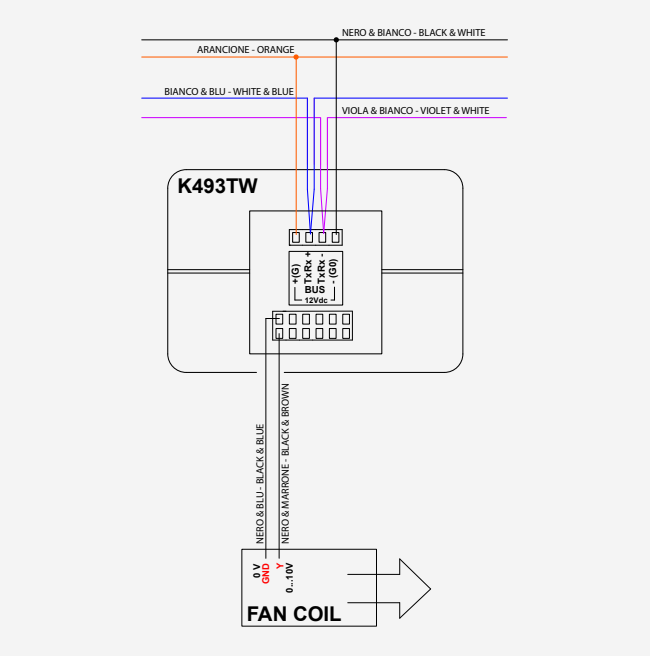

Control of the fan coil 3-speed command through KF201

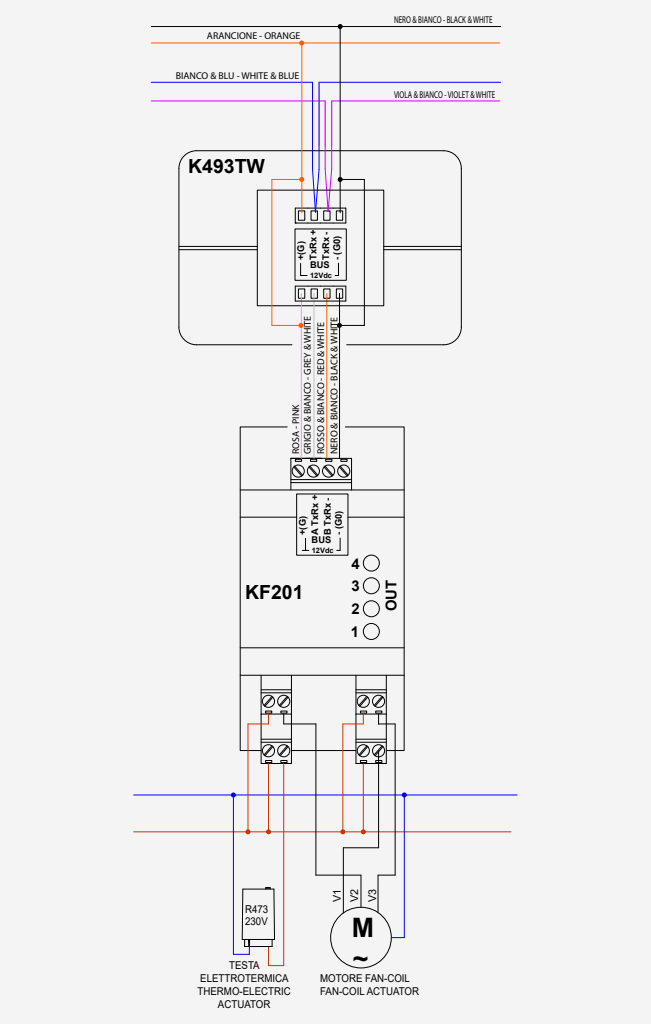

Giacomini S.p.A.
Via per Alzo 39, 28017 San Maurizio d'Opaglio (NO) Italy
consulenza.prodotti@giacomini.com
+39 0322 923372 - giacomini.com

Thermostat configuration

Bus addressing
To address the chronothermostat Bus, follow the steps below:
1) From the INSTALLER'S CONFIGURATION menu, select the ADDRESS submenu and the desired Bus address: from 128 to 143 (for KPM30), from 1 to 6 (for KPM22).
2) Make sure the value set in the BAUD RATE submenu is 19200.
3) Confirm by pressing ✓.

Activation of the Fan Coil Control mode
To execute the chronothermostat Fan Coil Control mode, follow the steps below:
1) From the INSTALLER'S CONFIGURATION menu select the FAN COIL CONTROL submenu.
2) Press FAN COIL CONTROL and use the arrows to select ON.
3) From the USER'S CONFIGURATION menu, select FAN COIL CONTROL and then the desired mode.
4) Confirm by pressing ✓.

Operation modes

There are three operation modes available: AUTOMATIC, TEMPORARY MANUAL and MANUAL.

AUTOMATIC mode
The automatic mode is identified by the symbol and follows the active program and its chronoprogram.
To activate this mode, click on the active-mode icon or change the program.
The automatic mode can control up to 8 independent time settings for every day of the week.
A different Set-Point temperature can be defined for every time setting.
In this way, the zone temperature will follow the time setting variations along the entire day.
The user can change the temperature Set-Point manually or resume the automatic mode.

TEMPORARY MANUAL mode
The temporary manual mode is identified by the symbol and it activates when the Set-Point temperature is changed.
To deactivate it, click on the active-mode icon.
This mode is automatically deactivated when switching to a different time setting of the chronoprogram.

MANUAL mode
It is identified by the symbol and provides full manual control of the Set-Point.
It can be activated only from the temporary manual mode by clicking on the active-mode icon.

Giacomini S.p.A.
Via per Alzo 39, 28017 San Maurizio d'Opaglio (NO) Italy
consulenza.prodotti@giacomini.com
+39 0322 923372 - giacomini.com

Reference standards

- CE certification
- EN 60730-1
- IEEE 802.11
- Classification of temperature control devices according to Reg.(EU) N.811/2013-813/2013: energy class IV, 2%.

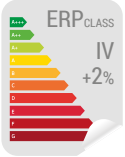

Product specifications

K493TW

Chronothermostat with touch screen, Wi-Fi and ModBus connection, for room temperature and humidity control. For use with Bus connection to the KPM22 or KPM30 electronic controller. It can control directly a 0..10 V fan coil or a 3-speed fan coil when combined to the KF201 control module. 12 Vdc power. Horizontal installation on wall or on an Italian standard 3-module box. 2,8" TFT color display Bus RS485 ModBus RTU communication protocol. Wi-Fi Protocol: 802.11 b/g/n. Working temperature range: 5÷50 °C. Temperature sensor: 5÷50 °C. Relative humidity sensor: 20÷80 %. Protection class IP10. Dimensions: 121 x 94 x 19 mm (L x H x W) Weight: 187 g. White. CE certification.

Safety Warning. Installation, commissioning and periodical maintenance of the product must be carried out by qualified operators in compliance with national regulations and/or local standards. A qualified installer must take all required measures, including use of Individual Protection Devices, for his and others' safety. An improper installation may damage people, animals or objects towards which Giacomini S.p.A. may not be held liable.

Package Disposal. Carton boxes: paper recycling. Plastic bags and bubble wrap: plastic recycling.

Additional information. For more information, go to giacomini.com or contact our technical assistance service. This document provides only general indications. Giacomini S.p.A. may change at any time, without notice and for technical or commercial reasons, the items included herewith. The information included in this technical sheet do not exempt the user from strictly complying with the rules and good practice standards in force.

Product Disposal. Do not dispose of product as municipal waste at the end of its life cycle. Dispose of product at a special recycling platform managed by local authorities or at retailers providing this type of service.

Giacomini S.p.A.
Via per Alzo 39, 28017 San Maurizio d'Opaglio (NO) Italy
consulenza.prodotti@giacomini.com
+39 0322 923372 - giacomini.com