K492T

Radiant Systems

Energy Management

Datasheet
0998EN 04/2025

Wi-Fi chronothermostat with humidity control, with touch screen

Wi-Fi weekly chronothermostat with humidity control with back-lit touch screen.
Horizontal installation on 503 3-module civil box.
Color: white. According to the version, the device can control thermo-electric actuators, dehumidifiers and fan coils.
Power supply 230 Vac.
Weekly/daily heating and cooling programming and possible manual control.
Integrated relative humidity sensor.
K-Domo dedicated **App** for simplified control also from remote.

Versions and product codes

PRODUCT CODE	POWER SUPPLY	FUNCTION
K492TY002	230 Vac	Control of thermo-electric actuators and dehumidifier
K492TY012	230 Vac	Control of thermo-electric actuators and fan coils 0..10 V

Dedicated App

- **K-DOMO:** App for control of Wi-Fi chronothermostat also from remote

APP K-DOMO PLAY STORE	APP K-DOMO APPLE STORE

Technical data

- Supply voltage/frequency: 100÷290 Vac / 47÷63 Hz
- Absorption: 65 mA, max 120mA
- Horizontal installation on 3-module box
- Working temperature range: 5÷50 °C
- Temperature sensor: 5÷50 °C / ±0.5 °C
- Relative humidity sensor: 20÷80 % | ±5 %
- Protection class: IP10
- 2,8" TFT color display
- Available versions:
  - **K492TY002:** 2 bistable relay output. 5 A max with resistive load, 2 A max with inductive load.
  - **K492TY012:** 1 relay output + 1 analogical output. Switchable voltage 0..10 V. Nominal current 50 mA max.
- WiFi 802.11
- Dimensions: 121 x 94 x 60 mm (LxHxW)
- Weight: 187 g

NOTE. Wireless device complying with standard 802.11 b/g/n, frequency 2.4-2.4835 GHz. Transmission power < 20 dBm. Safety protocol WPA/WPA2.

Giacomini S.p.A.
Via per Alzo 39, 28017 San Maurizio d'Opaglio (NO) Italy
consulenza.prodotti@giacomini.com
+39 0322 923372 - giacomini.com

Home screen

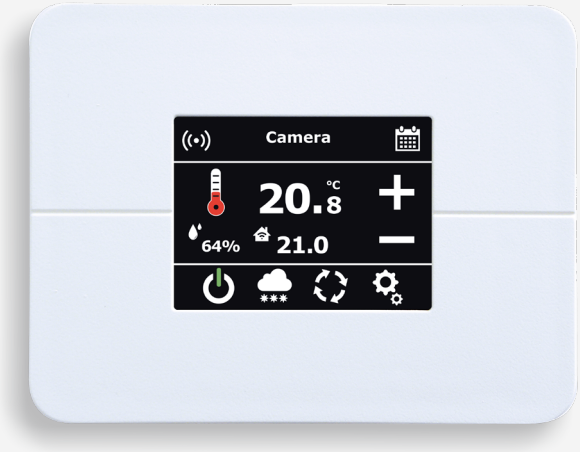

The home screen shows the zone name on top, the current temperature in the middle and the Set Point temperature right below.
The relative humidity is displayed on the left.

	WiFi status in upper left corner: • Grey - WiFi Off. • White - WiFi On and chronothermostat connected to the configured network. • Yellow - WiFi and network configuration both On. • Red - WiFi On and no connection to the configured network.
	Flashing in upper left corner - syncing with chronothermostat network.
	Flashing in upper left corner - one or more updates available.
	In upper left corner - WiFi reconnection attempt in progress.
	Flashing in upper left corner - update downloading.
	It turns On and modifies the chronoprogramming of the current program.
	They enable to change the SETPOINT temperature and switch to temporary manual control.
	AUTOMATIC CONTROL. It shows that the chronothermostat is setting the temperatures based on the chronothermostat time settings.
	TEMPORARY MANUAL CONTROL. It shows a SETPOINT temperature kept constant up to the next change of the chronoprogram time-setting. Press this icon once for manual control.
	MANUAL CONTROL. It shows a temperature SETPOINT constant at every time of the day. Press this icon once to restore automatic control.

	It shows when the chronothermostat is On. Press this icon once to go to the control-selection screen.
	It shows when the chronothermostat is Off. Press this icon once to go to the control-selection screen.
	It shows when the chronothermostat anti-freeze function is On. Press this icon once to go to the control-selection screen.
	Summer program On. Press this icon once to go to the program-selection screen.
	Winter program On. Press this icon once to go to the program-selection screen.
	Program number 1 On. Press this icon once to go to the program-selection screen.
	Use this icon to go to the setting screen.
	White - the SETPOINT temperature has been reached. Red or blue - the zone is being heated or cooled to reach the SETPOINT.
	These icons replace the symbols from the previous point when the chronothermostat controls a fan coil or another 3-speed device.
	White - humidity SETPOINT not reached Blue - dehumidifier active Red - anti-condensation function active

Giacomini S.p.A.
Via per Alzo 39, 28017 San Maurizio d'Opaglio (NO) Italy
consulenza.prodotti@giacomini.com
+39 0322 923372 - giacomini.com

Installation

⚠ **WARNING.** Installation and maintenance should be carried out by a professional operator with power Off.

The chronothermostat with humidity control must be installed on indoor walls, away from heat sources, at 1,5 m from the floor and in a position suitable to read the room temperature correctly.
It can be installed on 3-module boxes.
Use in dry rooms free of dust at a temperature between 5° C and 50° C.

1. Remove the two side brackets to install the appliance on a 3-module box.

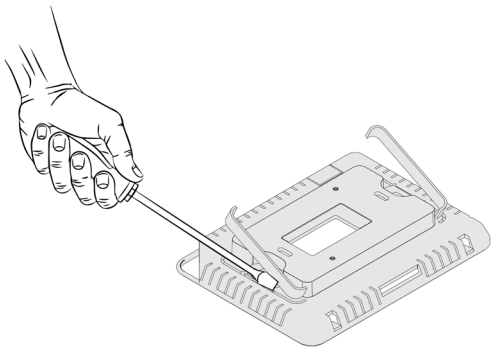

2. Fit the add-on module on the back of the thermostat with the connectors facing up, then tighten with 2 screws.

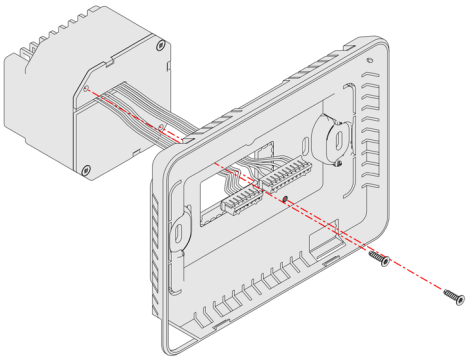

3. Fit the appliance on a 3-module box after carrying out the required connections.

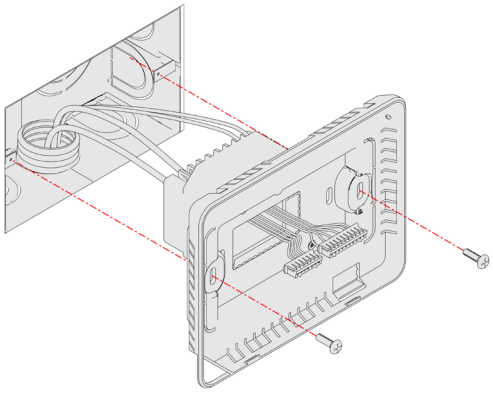

4. Connect the add-on module connectors to the display according to the order shown.

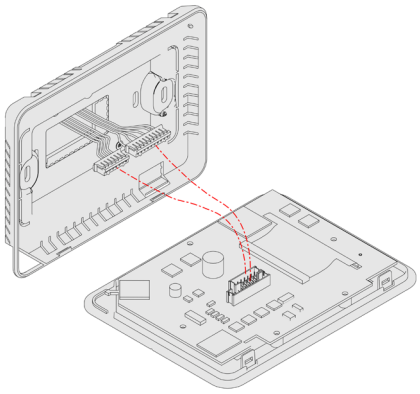

5. Install the display on the back of the appliance following the numbers shown in the picture.

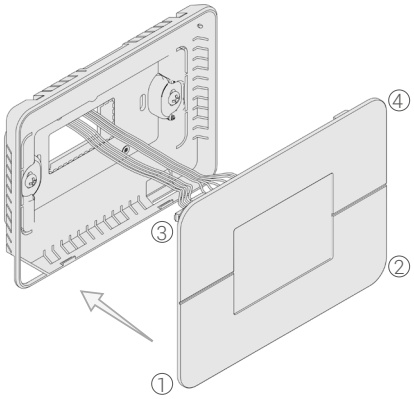

6. If necessary, open the appliance with a screwdriver.

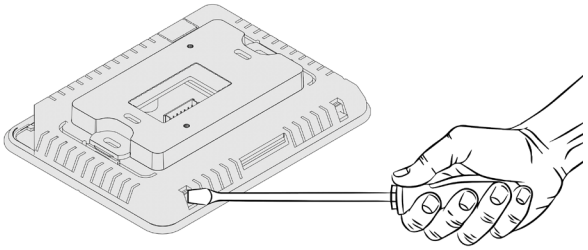

Giacomini S.p.A.
Via per Alzo 39, 28017 San Maurizio d'Opaglio (NO) Italy
consulenza.prodotti@giacomini.com
+39 0322 923372 - giacomini.com

Electric connections

⚠ **WARNING.** The electric connections must be carried out by a professional operator with power Off.

WiFi chronothermostat K492T can be easily replaced with a traditional wall-mount thermostat thanks to an add-on module fitted on the back of the device which provides direct power supply with a 230 Vac network voltage.
It also includes digital outputs to drive a boiler or analogical contact for modulation of an analogical fan coil.

K492TY002
with 2 relay outputs

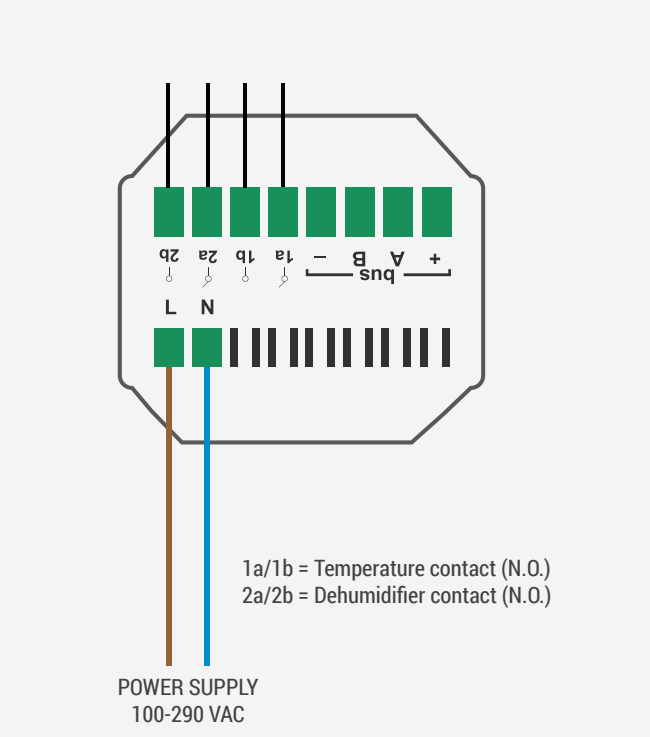

K492TY012
with 1 relay output + 1 analogical output

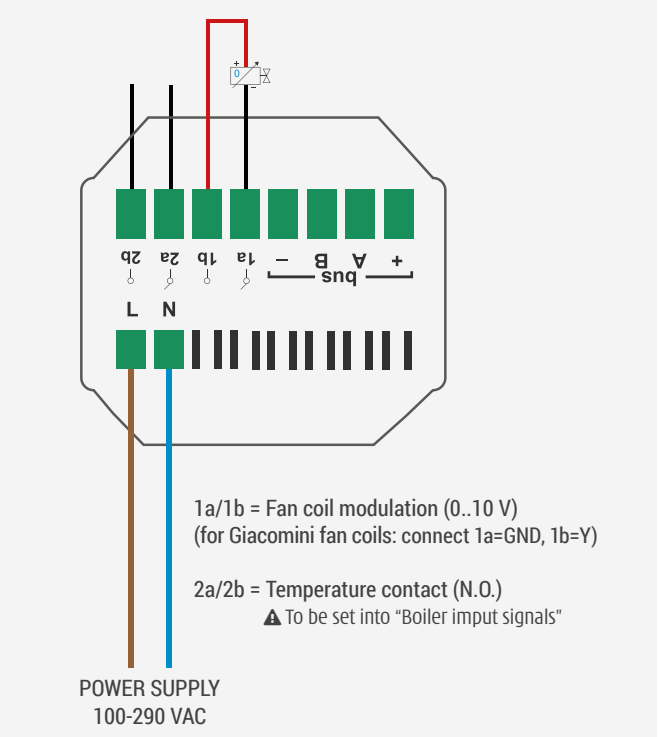

2A/2b output configuration
It enables to change the configuration of the chronothermostat second output.
Available options:

Cooling/Heating
It sets the chronothermostat second output for Summer or Winter control.
It activates/deactivates based on the heating or cooling program (in summer the contact is closed).
⚠ Default configuration for K492TY012 thermostat; to avoid malfunctions it's mandatory to manually set this configuration in "Boiler input signals".

Dew point matching
It sets the chronothermostat second output for dew point control.
Once selected, the installer's menu displays the dew point thresholds beyond which the output is activated.
Dew point threshold: it sets the dew point threshold beyond which the chronothermostat second output is activated.

Humidity matching
It sets the chronothermostat second output for control of the relative humidity.
Once selected, the installer's menu displays the humidity limit chosen.
Humidity threshold: it sets the humidity threshold beyond which the chronothermostat second output is activated.
Anti-condensation protection for summer cooling: the chronothermostat, based on the rising relative humidity of the environment, automatically closes the hydraulic supply to the radiant system before reaching the dew point and reopens once the danger has been averted.
⚠ Default configuration for K492TY002 thermostat.

Boiler input signals
It allows to set the second relay output for temperature control.
⚠ Configuration to be mandatory set for the K492TY012 thermostat.

Giacomini S.p.A.
Via per Alzo 39, 28017 San Maurizio d'Opaglio (NO) Italy
consulenza.prodotti@giacomini.com
+39 0322 923372 - giacomini.com

Operation

AUTOMATIC control

The automatic mode is identified by , it follows the active program and its chronoprogram.
To activate, click on the active-mode icon or change the program.
The automatic mode can control up to 8 independent time settings for every day of the week.
A different Set point temperature can be defined for every time setting.
In this way, the zone temperature will follow the time setting variations along the entire day.
The user can change the temperature Set point manually or reset the automatic mode.

TEMPORARY MANUAL control

The temporary manual mode is identified by and it activates when the Set point temperature is changed.
To deactivate, click on the active-mode icon. This mode is automatically deactivated when switching to a different time setting of the chronoprogram.

MANUAL control

It is identified by and provides for full manual control of the Set point.
It can be activated only from the temporary manual mode by clicking on the active-mode icon.

Reference standards

- CE certification
- EN 60730-1
- IEEE 802.11
- Classification of temperature control devices according to Reg.(EU) N.811/2013-813/2013: energy class IV, 2%.

Product specifications

K492T

Wi-Fi weekly chronothermostat with humidity control with back-lit touch screen. Horizontal installation on 503 3-slot civil box or wall-mount. Color: white. According to the version, the device controls thermo-electric actuators, dehumidifiers and fan coils. Weekly/daily heating and cooling programming and possible manual control. Integrated relative humidity sensor. K-Domo dedicated App for simplified control also from remote. Power supply 230 Vac. Absorption: 65 mA, max 120mA. Protection class: IP10. Dimensions: 121 x 94 x 60 mm (LxHxW). Weight: 187 g. Working temperature range: 5÷50 °C. CE certification. Complying with standard 802.11 b/g/n, frequency 2.4-2.4835 GHz. Transmission power < 20 dBm. Safety protocol WPA/WPA2.

Safety Warning. Installation, commissioning and periodical maintenance of the product must be carried out by qualified operators in compliance with national regulations and/or local standards. A qualified installer must take all required measures, including use of Individual Protection Devices, for his and others' safety. An improper installation may damage people, animals or objects towards which Giacomini S.p.A. may not be held liable.

Package Disposal. Carton boxes: paper recycling. Plastic bags and bubble wrap: plastic recycling.

Additional information. For more information, go to giacomini.com or contact our technical assistance service. This document provides only general indications. Giacomini S.p.A. may change at any time, without notice and for technical or commercial reasons, the items included herewith. The information included in this technical sheet do not exempt the user from strictly complying with the rules and good practice standards in force.

Product Disposal. Do not dispose of product as municipal waste at the end of its life cycle. Dispose of product at a special recycling platform managed by local authorities or at retailers providing this type of service.

Giacomini S.p.A.
Via per Alzo 39, 28017 San Maurizio d'Opaglio (NO) Italy
consulenza.prodotti@giacomini.com
+39 0322 923372 - giacomini.com