GE556-1

Energy Management

GE556Y181 HIU with adjustable tail pieces and exchanger for heating

Datasheet/Instruction
1088EN ↻ 03/2025
047U59198

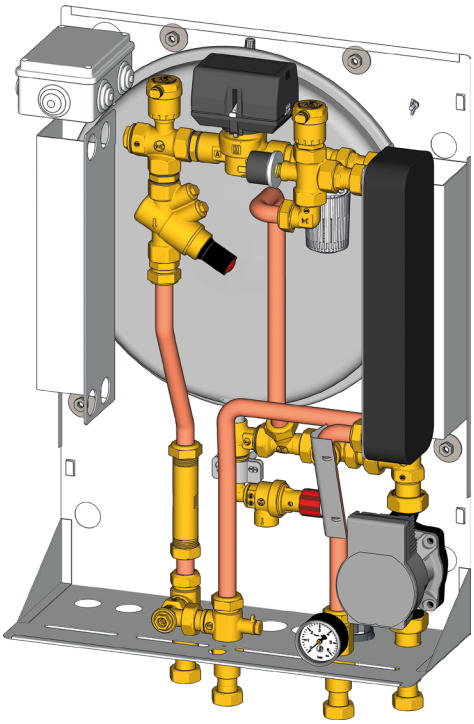

GE556Y181 Heat Interface Unit (HIU) is designed for metering of thermal energy consumptions in autonomous heating systems with centralized heat production (e.g. teleheating).

Giacomini S.p.A.
Via per Alzo 39, 28017 San Maurizio d'Opaglio (NO) Italia
consulenza.prodotti@giacomini.com
+39 0322 923372 - giacomini.com

Versions and product codes

PRODUCT CODE	TYPE OF HIU	HEATING CIRCUIT POWER	TEMPLATE WITH VALVES
GE556Y181	Heating	16,7 kW	GE551Y091/GE551Y093

Completion codes
- GE552: thermal energy meter
- GE551Y180: polyethylene foam insulation
- GE551Y091: template with shut-off valves and G 3/4"M connections for connection to the system circuit from the bottom
- GE551Y093: template with shut-off valves, filters and Ø22 connections for connection to the system circuit from the top
- Components for data centralization from GE552-4 M-Bus or GE552-W Wireless M-Bus.

NOTE. Use energy meters complying with standardized "disturbing elements" and provided for by EN1434 for straight tracts that are null upstream and downstream, like GE552Y122.

Technical data

- Max. working temperature: 90 °C
- Max working pressure:
  - Primary circuit: 16 bar
  - Heating secondary circuit: 3 bar
- Primary nominal flow rate: 670 l/h @ 80 °C for 17,9 kW

WARNING. Max working differential pressure for primary circuit = 4 bar (priority valve)

WARNING. The HIU is fit for installation in indoor spaces and boiler rooms, and for use with non-aggressive fluids (water, glycol-based water complying with VDI 2035/ONORM 5195).

Main characteristics

- G 3/4"F connections with adjustable tail pieces
- Heating heat exchanger
- R206ANY014 dynamic balancing valve on primary circuit
- Motorized 2-way zone valve on heating primary circuit
- Heating control with temperature setting through fixed-point thermostatic head (setting range 20÷70 °C)
- Air vents on heating primary and secondary circuit
- Expansion vessel, pressure switch and safety valve on heating secondary circuit
- 15/7 electronic pump, center distance 130 mm, complying with ErP (2009/125/CE)
- Fit for installation of a thermal energy meter by removing the brass spacer
- Box with electric terminal block
- Varnished metal-sheet cabinet (RAL9010) with lock

Giacomini S.p.A.
Via per Alzo 39, 28017 San Maurizio d'Opaglio (NO) Italia
consulenza.prodotti@giacomini.com
+39 0322 923372 - giacomini.com

Components

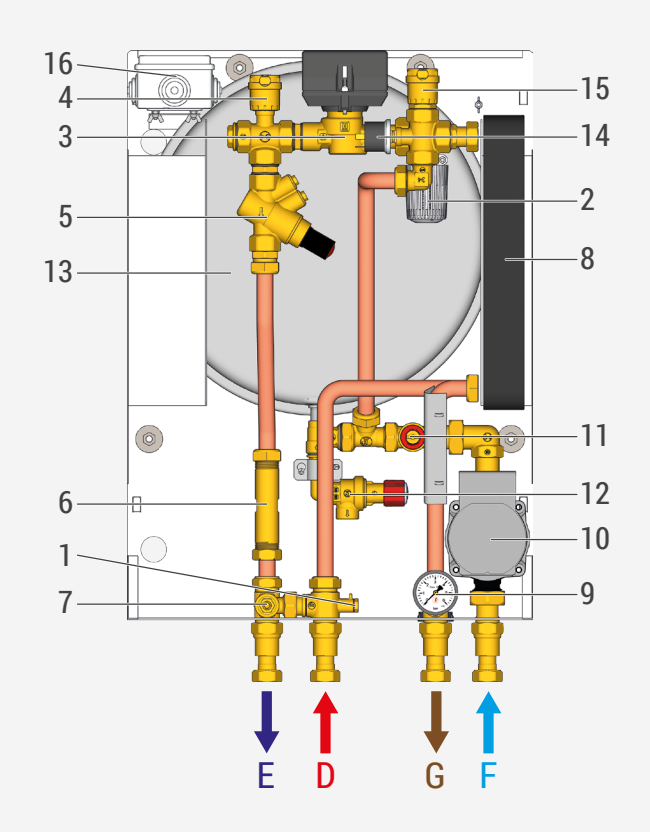

PRIMARY CIRCUIT	1	Housing for thermal energy meter temperature probe
	2	R462L thermostatic head for heating temperature control (setting range 20÷70 °C)
	3	Motorized 2-way zone valve
	4	Automatic air vent
	5	R206ANY014 dynamic balancing valve
	6	Brass spacer for thermal energy meter
	7	Primary circuit by-pass
HEATING SECONDARY CIRCUIT	8	Heating heat exchanger
	9	Pressure gauge 0÷6 bar
	10	15/7 electronic pump
	11	Ball valve for pump maintenance
	12	Safety valve, 3-bar calibration
	13	Expansion vessel
	14	Pressure switch, 0,8 bar calibration
	15	Automatic air vent
OTHER COMPONENTS	16	IP55 electric box
HYDRAULIC CONNECTIONS	D	Primary inlet
	E	Primary outlet
	F	Heating return circuit
	G	Heating supply circuit

Giacomini S.p.A.
Via per Alzo 39, 28017 San Maurizio d'Opaglio (NO) Italia
consulenza.prodotti@giacomini.com
+39 0322 923372 - giacomini.com

Completion codes

- GE552: thermal energy meter. The energy meter temperature probe must be installed inside the corresponding housing (Components - Ref. 1)
- GE551Y180: polyethylene foam insulation
- GE551Y091: template with shut-off valves and G 3/4"M connections for connection to the system circuit from the bottom
- GE551Y093: template with shut-off valves, filters and Ø22 connections for connection to the system circuit from the top

GE551Y091
Template with 4 valves (connection from the bottom)

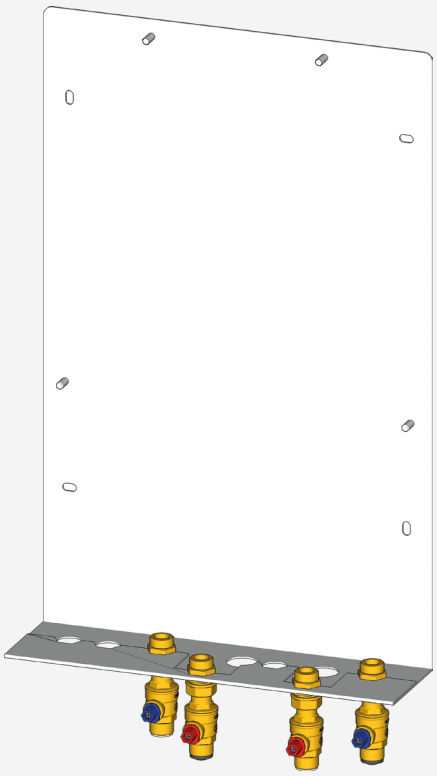

GE551Y093
Template with 4 valves (for connection from the top or the bottom)

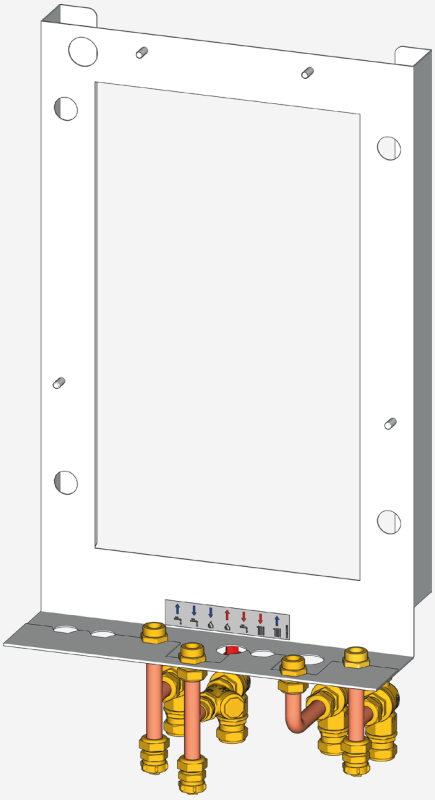

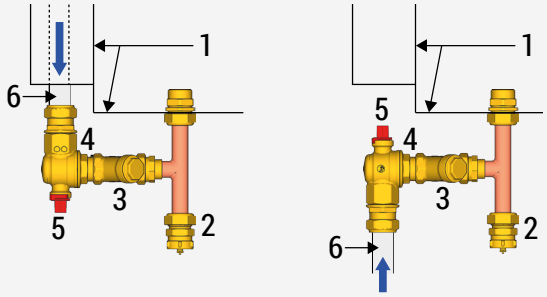

FLUID INLET FROM ABOVE

FLUID INLET FROM BELOW

1) Metal frame
2) Fitting for system filling and flushing
3) Inspectionable filter
4) Joint for connection from the top or the bottom
5) Ball valve for HIU isolation
6) Ø 22 mm system pipes

Giacomini S.p.A.
Via per Alzo 39, 28017 San Maurizio d'Opaglio (NO) Italia
consulenza.prodotti@giacomini.com
+39 0322 923372 - giacomini.com

Operation

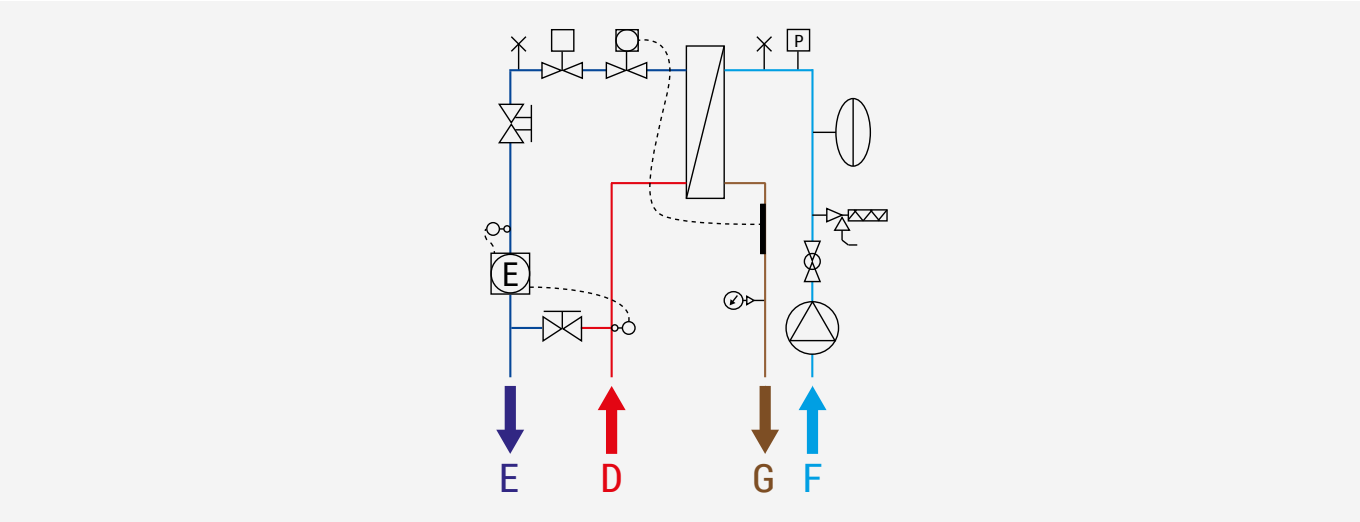

	Motorized 2-way zone valve
	Thermostatic head with temperature probe
	Dynamic balancing valve
	Automatic air vent
	Pump
	Heat exchanger
	Expansion vessel
	Safety valve
	Shut-off ball valve
	Pressure gauge
P	Min pressure switch
	Probe housing for thermal energy meter
	By-pass setting lockshield
E	Spacer for thermal energy meter

D	Primary inlet
E	Primary outlet
F	Heating return circuit
G	Heating supply circuit

Giacomini S.p.A.
Via per Alzo 39, 28017 San Maurizio d'Opaglio (NO) Italia
consulenza.prodotti@giacomini.com
+39 0322 923372 - giacomini.com

Primary circuit

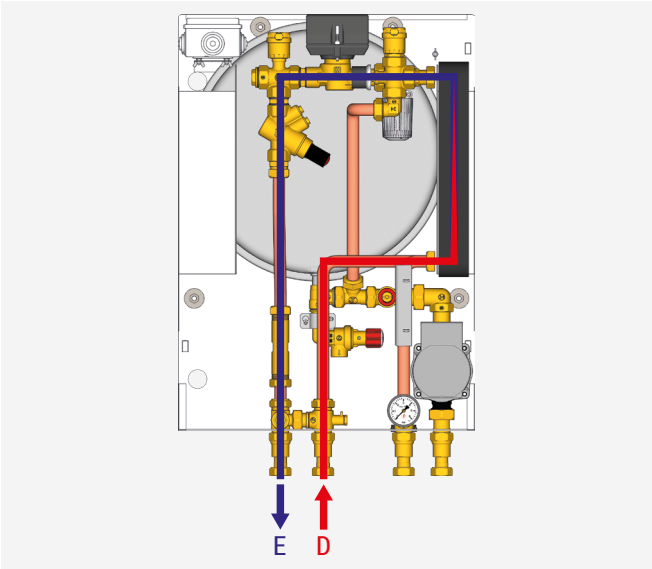

Primary inlet (D) and return (E).
The primary circuit consists of an air vent, a dynamic balancing valve, a motorized 2-way zone valve, a brass spacer, a housing for installation of the energy meter temperature probe, a by-pass valve and a thermostatic head to control the heating temperature.
The brass spacer (Components - Ref. 9) can be replaced with a thermal energy meter by installing its temperature probe in the corresponding housing (Components - Ref. 1).
The zone valve manages the heating through a chronothermostat (to be ordered separately).

Secondary circuit: heating

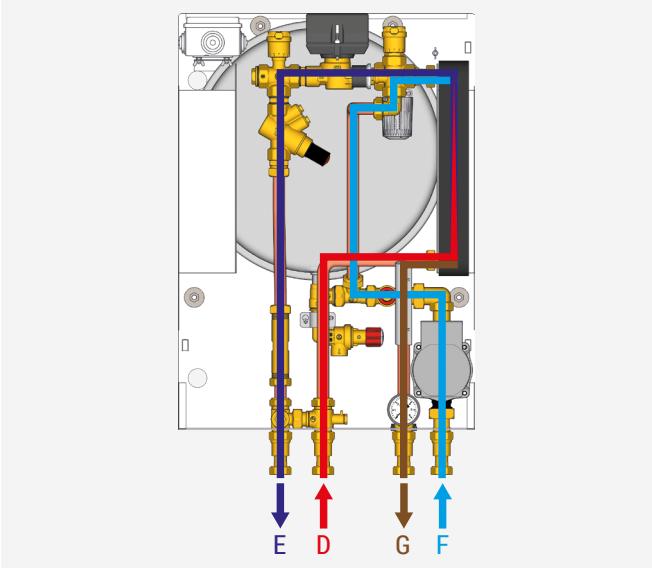

Supply (G) and return (F).
The heating circuit consists of a heat exchanger, a pump, a ball valve for maintenance of the pump, a pressure switch, an air vent, a safety valve and a pressure gauge.
Provide a filling system for the heating circuit by connecting the domestic water to the heating circuit with a backflow preventer.

Giacomini S.p.A.
Via per Alzo 39, 28017 San Maurizio d'Opaglio (NO) Italia
consulenza.prodotti@giacomini.com
+39 0322 923372 - giacomini.com

Settings

Setting the R206ANY014 dynamic balancing valve (Δp: 30-400 kPa)

SETTING	l/s	l/h
1,0	0,113	406
1,1	0,119	427
1,2	0,125	449
1,3	0,131	470
1,4	0,137	492
1,5	0,143	513
1,6	0,149	535
1,7	0,155	556
1,8	0,161	578
1,9	0,167	599
2,0	0,172	621
2,1	0,178	642
2,2	0,184	664
2,3	0,190	685
2,4	0,196	707
2,5	0,202	728
2,6	0,208	750
2,7	0,214	771
2,8	0,220	793
2,9	0,226	814
3,0	0,232	836
3,1	0,238	857
3,2	0,244	879
3,3	0,250	900
3,4	0,256	922
3,5	0,262	943
3,6	0,268	965
3,7	0,274	987
3,8	0,280	1010
3,9	0,286	1030
4,0	0,292	1050
4,1	0,298	1070
4,2	0,304	1090
4,3	0,310	1120
4,4	0,316	1140
4,5	0,322	1160
4,6	0,328	1180
4,7	0,334	1200
4,8	0,340	1220
4,9	0,346	1240
5,0	0,352	1270

Use an 8-mm hexagonal wrench to set the dynamic balancing valve.

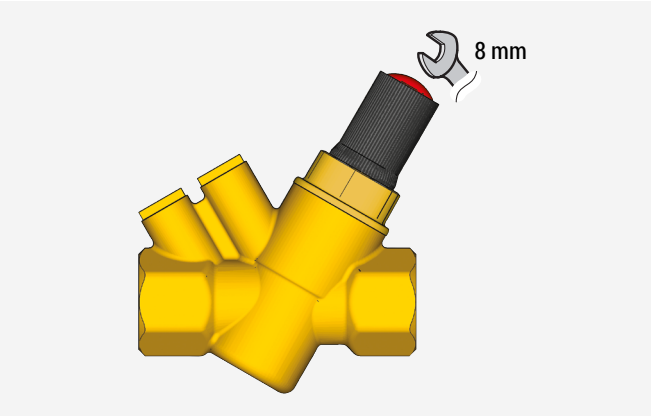

R462L heating thermostatic head

Use the thermostatic head to set the heating temperature (Components - Ref. 2).
Setting range: 20÷70 °C.

⚠ **WARNING.** Install a safety thermostat for low-temperature heating applications.

When the heating nominal temperature exceeds the thermostatic head setting, the primary flow rate may be too high and prevent the thermostatic head from closing.
To balance the heating function, adjust the dynamic balancing valve (Components - Ref. 5).
It is also possible to change the heating power by modifying the pump speed with the red knob (Components - Ref. 10).

Giacomini S.p.A.
Via per Alzo 39, 28017 San Maurizio d'Opaglio (NO) Italia
consulenza.prodotti@giacomini.com
+39 0322 923372 - giacomini.com

Pump features

Constant differential pressure Δp-c (I, II, III) [RECOMMENDED]

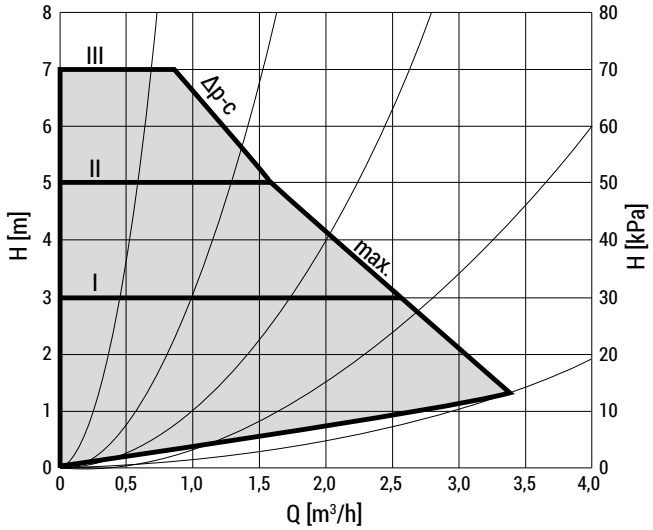

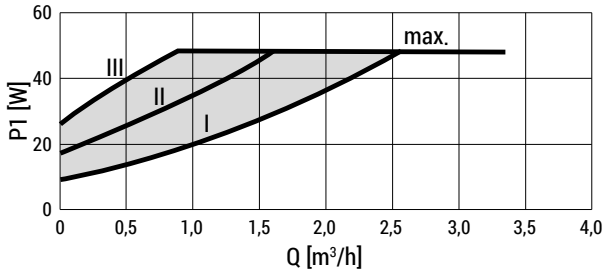

Setting the control mode

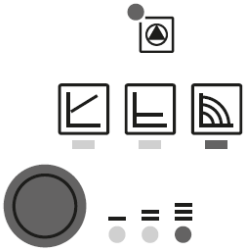

The LED selection of control modes and corresponding pump curves takes place in clockwise succession.

• Press the operating button briefly (approx. 1 second).

➔ LEDs display the set control mode and pump curve.

Air venting

• Fill and vent the system correctly. If the pump does not vent automatically:

• Activate the pump venting function via the operating button: press and hold for 3 seconds, then release.

➔ The pump venting function is initiated and lasts 10 minutes.

➔ The top and bottom LED rows flash in turn at 1 second intervals.

➔ To cancel, press and hold the operating button for 3 seconds.

• After venting, the LED display shows the previously set values of the pump.

Fault signals

• The fault signal LED indicates a fault.

• The pump switches off (depending on the fault) and attempts a cyclical restart.

LED	FAULTS	CAUSES	REMEDY
Lights up red	Blocking	Rotor blocked	Activate manual restart or acontact customer service
	Contacting/winding	Winding defective	
Flashing red	Under/overvoltage	Power supply too low/high on mains side	Check mains voltage and operating conditions, and request customer service
	Excessive module temperature	Module interior too warm	
	Short-circuit	Motor current too high	
Flashing red/green	Generator operation	Water is flowing through the pump hydraulics, but there is no mains voltage at the pump	Check the mains voltage, water quantity/pressure and the ambient conditions
	Dry run	Air in the pump	
	Overload	Sluggish motor, pump is operated outside of its specifications (e.g. high module temperature). The speed is lower than during normal operation	

Giacomini S.p.A.
Via per Alzo 39, 28017 San Maurizio d'Opaglio (NO) Italia
consulenza.prodotti@giacomini.com
+39 0322 923372 - giacomini.com

Electric connections

⚠ **WARNING.** Only professional operators should carry out interventions on the electric components. Make sure to disconnect the power supply during connection.

Electric technical data

- Pump supply: 230 V / 50 Hz
- Max electric power for HIU: 43 W
- Electric power for the pump: 3÷45 W / 0,03÷0,44 A

Heating demand: thermostat connections

The heating demand can be implemented through a thermostat normally open and connected directly to the electric terminal of the cabinet outlet.
Use a 0,5-mm² 2-conductor cable to connect the thermostat.
There is no specific polarity required for connection.

M-Bus

To connect the M-Bus data transmission cable to the concentrator, refer to the datasheet of the thermal energy meter used.

Connecting the electric box (Components - Ref. 16)

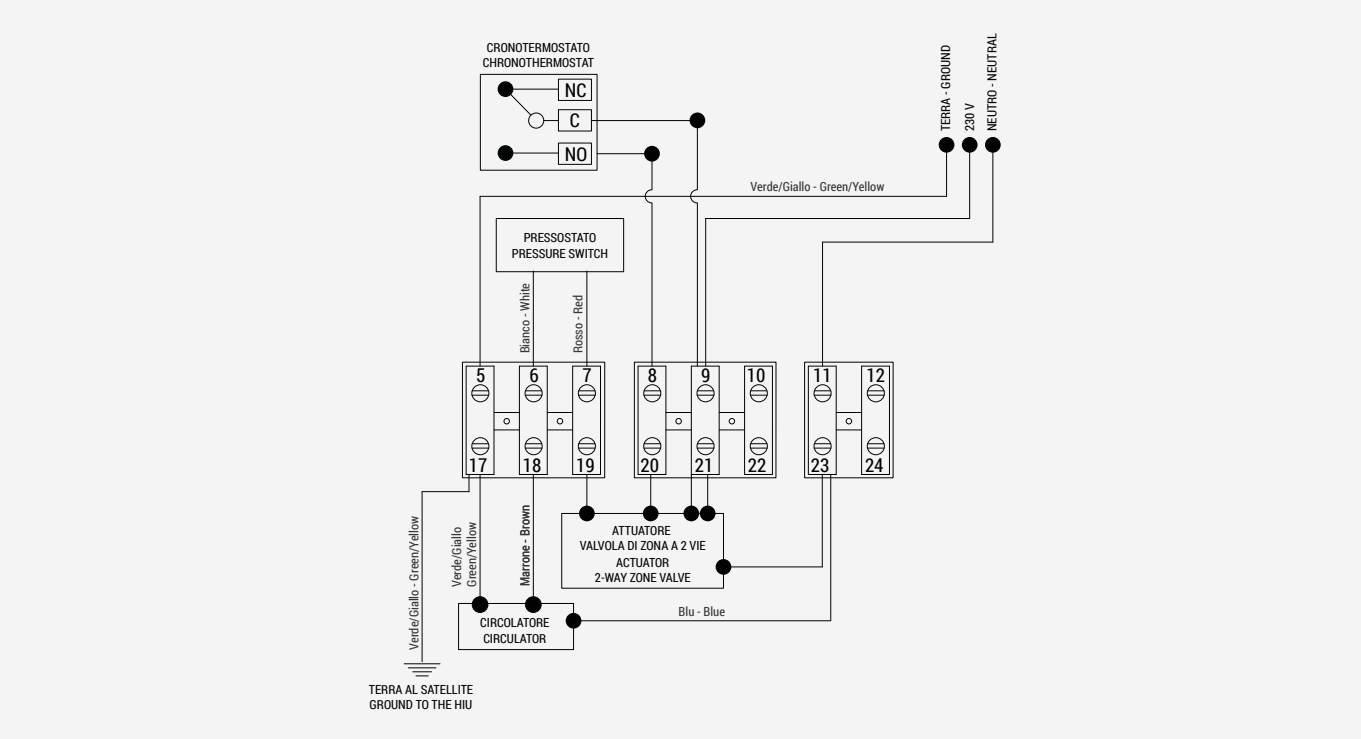

Giacomini S.p.A.
Via per Alzo 39, 28017 San Maurizio d'Opaglio (NO) Italia
consulenza.prodotti@giacomini.com
+39 0322 923372 - giacomini.com

Protection and safety system

Only qualified operators authorized by the building management should access the HIUs: the cabinet is provided with a lock. Optionally, a K373/K373I safety thermostat can be installed to prevent excessive temperature in the heating circuit.

⚠ **WARNING.** Risk of burns and electric shocks. Only qualified operators authorized by the building manager should access the HIU.

Installation, inspections and maintenance

⚠ **IMPORTANT WARNING.** Vibrations during transport may loosen the connections. Check all flat-housing connections before start up and tighten if necessary.

⚠ **WARNING.** Risk of burns and electric shocks.
Only qualified operators authorized by the building manager should install the HIU.
Refer to specific standards for use (installation, fixing, etc...), operation, recalibration and replacement of meters.
Also refer to the assembly instructions provided with each meter.

⚠ **WARNING.** Flush all pipes before installing the HIU on the template.

⚠ **WARNING.** Unused connections and ball valves must be closed with a cap.

⚠ **WARNING.** Upon installation, also include a filling circuit for the secondary circuit.

⚠ **WARNING.** To prevent impurities from entering and damaging the valve mechanism, close the cap of the air vent when flushing and filling the system.

Heating circuit pressure

Periodically check the pressure value of the heating circuit through the gauge: it must be kept above 1 bar (pressure values lower than 1 bar may damage the pump by cavitation).
A pressure switch set on 0,8 bar is included to protect the pump.

⚠ **WARNING.** The pump stops when the pressure switch decreases the related pressure below 0,8 bar. Refill the system to turn the HIU back on.

Provide a filling system for the heating circuit by connecting the domestic water to the heating circuit with a disconnector.
Upon filling, make sure the safety valve activates at 3 bar (Components - Ref. 12).

⚠ **WARNING.** Risk of burns.

Safety valve

Turn the safety valve handwheel periodically (Components - Ref. 12). Pay attention to hot liquid leakages from the drain.

⚠ **WARNING.** Risk of burns.

Installing the template on the wall

Mount the template on the wall using screw anchors fit for the type of wall and weight of the equipment, leaving a distance of at least 1,5 m between the template base and the ceiling.
The HIU can be installed at any height on the wall, however we recommend leaving a 1 m minimum distance between the floor and the HIU cover base.
Install the fittings in the appropriate holes on the template and secure them with the appropriate ring nuts with a wrench.
Install the ball valves to the fittings by tightening the swivel nut.
Connect the system pipes to the template ball valves provided with G 3/4"M connections using suitable adaptors.
Refer to the template label for proper installation of the pipes.

Installing the HIU on the template

For an easier installation, the HIU includes 3/4"F flat seat nuts with adjustable tail pieces (10 mm extension).
Before fitting the HIU on the template, extend every single adjustable tail piece up to its max. length.
Using a hard surface as reference, press all the adjustable tail pieces (previously extended to their max. length) at the same time to align them.
To fasten the HIU to the template, use the tie rods already present on the template itself.
First insert the gaskets on the template and tighten gently by hand.
Complete the installation by tightening the HIU nuts on the template connections (max. torque 60 Nm) using a backup spanner.

GE556Y181 operating data

Primary circuit

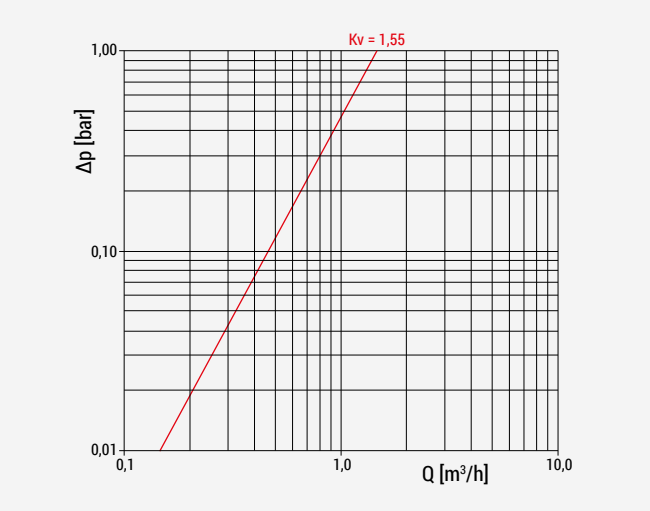

Heating primary circuit, dynamic balancing valve fully open

Heating secondary circuit

LOW-TEMPERATURE HEATING (Δt 45-38 °C)			PRIMARY CIRCUIT WORKING CONDITIONS		
PUMP SPEED	FLOW RATE [l/h]	POWER [kW]	INLET T [°C]	FLOW RATE [l/h]	OUTLET T [°C]
MAX.	1200	9,8	70	280	39
			65	340	39
			60	430	40

HIGH-TEMPERATURE HEATING (Δt 65-53 °C)			PRIMARY CIRCUIT WORKING CONDITIONS		
PUMP SPEED	FLOW RATE [l/h]	POWER [kW]	INLET T [°C]	FLOW RATE [l/h]	OUTLET T [°C]
MAX.	1200	16,7	80	670	57
			75	950	59
			72	1270	60

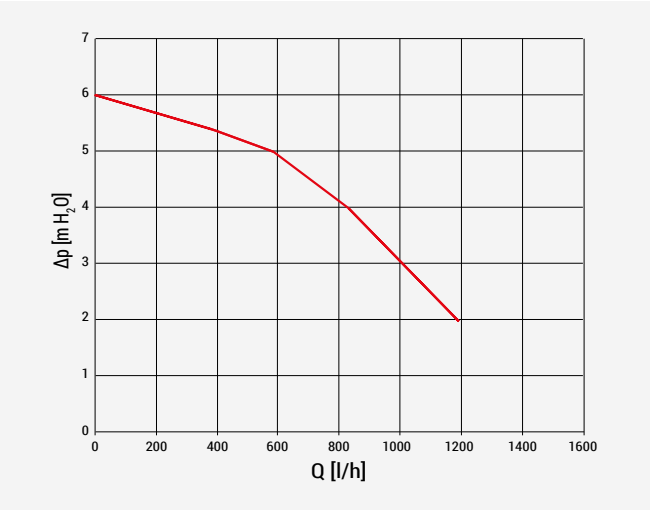

Heating pump diagram

Giacomini S.p.A.
Via per Alzo 39, 28017 San Maurizio d'Opaglio (NO) Italia
consulenza.prodotti@giacomini.com
+39 0322 923372 - giacomini.com

Dimensions

GE556Y181 HIU ONLY

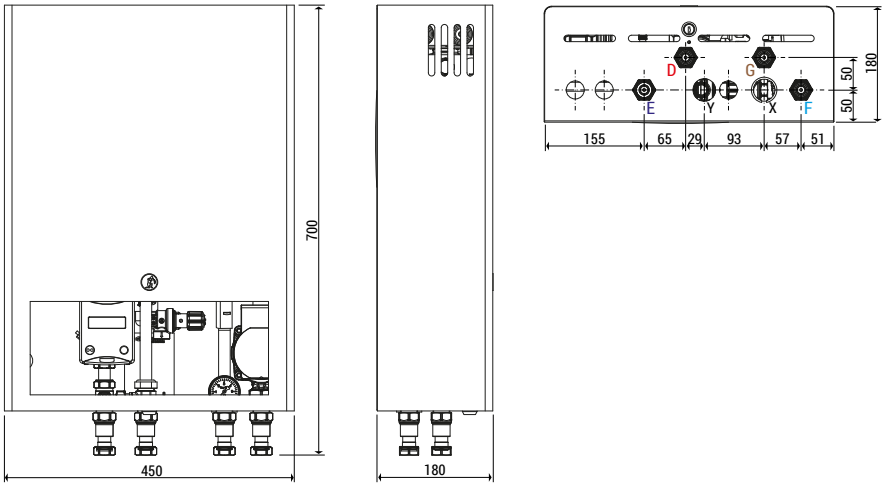

GE556Y181 HIU + GE551Y091 TEMPLATE

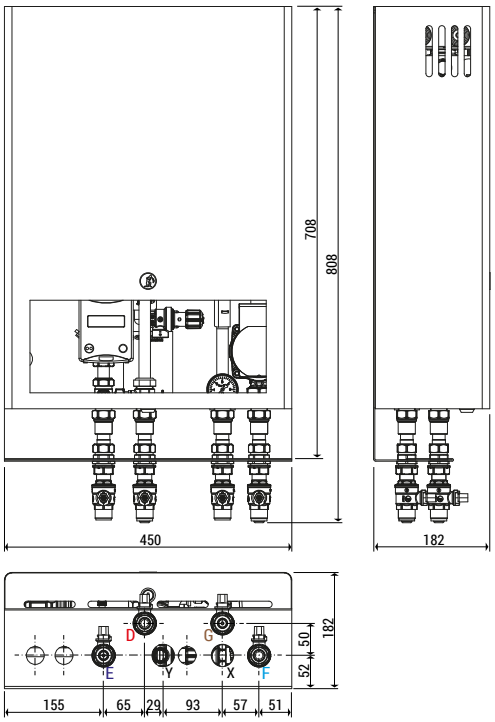

GE556Y181 HIU + GE551Y093 TEMPLATE

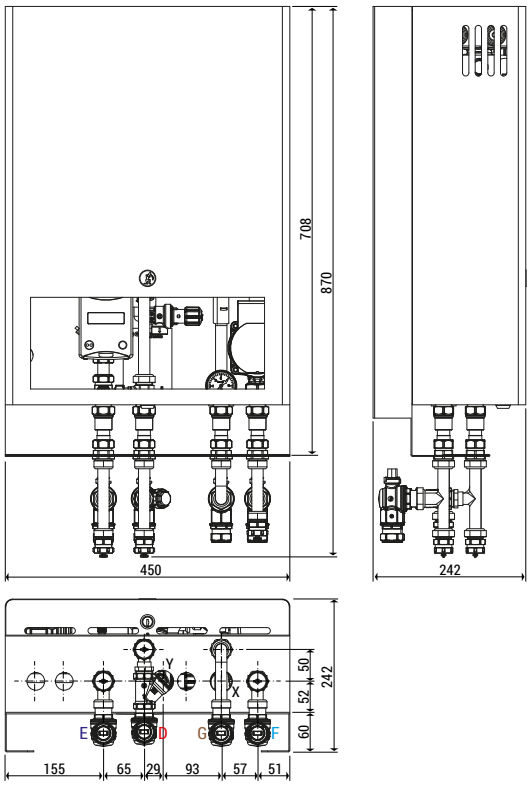

D	Primary inlet
E	Primary outlet
F	Heating return circuit
G	Heating supply circuit

X	Cable duct
Y	Safety valve drain

Dimensions in mm

Giacomini S.p.A.
Via per Alzo 39, 28017 San Maurizio d'Opaglio (NO) Italia
consulenza.prodotti@giacomini.com
+39 0322 923372 - giacomini.com

Reference Standards

- UNI EN 1434
- EN 60751
- EN 61107
- Measuring Instruments Directive 2014/32/UE (MID)
- ErP Directive 2009/125/CE

IT AVVERTENZE PER IL CORRETTO SMALTIMENTO DEL PRODOTTO

Questo prodotto rientra nel campo di applicazione della Direttiva 2012/19/UE riguardante la gestione dei rifiuti di apparecchiature elettriche ed elettroniche (RAEE).
L'apparecchio non deve essere eliminato con gli scarti domestici in quanto composto da diversi materiali che possono essere riciclati presso le strutture adeguate.
Informarsi attraverso l'autorità comunale per quanto riguarda l'ubicazione delle piattaforme ecologiche atte a ricevere il prodotto per lo smaltimento ed il suo successivo corretto riciclaggio.
Si ricorda, inoltre, che a fronte di acquisto di apparecchio equivalente, il distributore è tenuto al ritiro gratuito del prodotto da smaltire.
Il prodotto non è potenzialmente pericoloso per la salute umana e l'ambiente, ma se abbandonato nell'ambiente impatta negativamente sull'ecosistema.
Leggere attentamente le istruzioni prima di utilizzare l'apparecchio per la prima volta. Si raccomanda di non usare assolutamente il prodotto per un uso diverso da quello a cui è stato destinato, essendoci pericolo di shock elettrico se usato impropriamente.

Il simbolo del bidone barrato, presente sull'etichetta posta sull'apparecchio, indica la rispondenza di tale prodotto alla normativa relativa ai rifiuti di apparecchiature elettriche ed elettroniche.
L'abbandono nell'ambiente dell'apparecchiatura o lo smaltimento abusivo della stessa sono puniti dalla legge.

EN IMPORTANT INFORMATION FOR CORRECT DISPOSAL OF THE PRODUCT

This product falls into the scope of the Directive 2012/19/EU concerning the management of Waste Electrical and Electronic Equipment (WEEE).
This product shall not be dispose in to the domestic waste as it is made of different materials that have to be recycled at the appropriate facilities.
Inquire through the municipal authority regarding the location of the ecological platforms to receive the product for disposal and its subsequent correct recycling.
Furthermore, upon purchase of an equivalent appliance, the distributor is obliged to collect the product for disposal free of charge.
The product is not potentially dangerous for human health and the environment, but if abandoned in the environment can have negative impact on the environment. Read carefully the instructions before using the product for the first time. It is recommended that you do not use the product for any purpose rather than those for which it was intended, there being a danger of electric shock if used improperly.

The crossed-out wheeled dustbin symbol, on the label on the product, indicates the compliance of this product with the regulations regarding Waste Electrical and Electronic Equipment.
Abandonment in the environment or illegal disposal of the product is punishable by law.

FR AVERTISSEMENTS POUR L'ÉLIMINATION CORRECTE DU PRODUIT

Ce produit entre dans le champ d'application de la directive 2012/19 / UE relative à la gestion des déchets équipements électriques et électroniques (DEEE).
L'appareil ne doit pas être jeté avec les ordures ménagères car il est fait de différents matériaux pouvant être recyclés dans des centres appropriés.
Renseignez-vous auprès de l'autorité locale concernant l'emplacement des plates-formes écologiques appropriées pour recevoir le produit pour sa destruction et son recyclage correct ultérieur.
Il convient également de rappeler que, en cas d'achat d'un appareil équivalent, le distributeur est tenu de collecter le produit à détruire. Le produit n'est potentiellement pas dangereux pour la santé humaine et l'environnement, mais s'il est abandonné dans l'environnement, il a un impact négatif sur l'écosystème.
Lisez attentivement les instructions avant d'utiliser l'appareil pour la première fois.
Il est interdit d'utiliser le produit pour un usage différent de celui auquel il était destiné, il y a risque de choc électrique si utilisé incorrectement.

Le symbole de la poubelle barrée sur l'étiquette de l'appareil indique sa correspondance produit à la législation relative aux déchets d'équipements électriques et électroniques.
L'abandon dans l'environnement de l'équipement ou l'élimination illégale de l'équipement est punissable par la loi.

DE WICHTIGE HINWEISE ZUR KORREKTEN ENTSORGUNG DES PRODUKTS

Dieses Produkt fällt in den Anwendungsbereich der Richtlinie 2012/19/EU über die Entsorgung von Elektro- und Elektronik - Altgeräten (WEEE).
Dieses Produkt darf nicht in den Hausmüll entsorgt werden, da es aus verschiedenen Materialien besteht, die in entsprechenden Einrichtungen recycelt werden müssen.
Erkundigen sie sich bei ihrer Gemeinde nach dem Standort des nächsten Recyclinghofs bzw. der nächsten Annahmestelle, um das Produkt dem Recycling zuzuführen bzw. fachgerecht zu entsorgen.
Darüber hinaus ist der Händler verpflichtet, das Produkt beim Kauf eines gleichwertigen Geräts kostenlos zu entsorgen. Das Produkt ist für die menschliche Gesundheit und die Umwelt potenziell nicht gefährlich. Diese können sich aber, falls sie in der Umwelt gelangen, negativ auf diese auswirken. Lesen Sie daher vor dem ersten Gebrauch des Produkts die Inbetriebnahme-, Bedienungs- und Entsorgungsanweisungen sorgfältig durch. Es wird empfohlen, dass Sie das Produkt nur für den vorgesehenen Zweck verwenden.
Bei unsachgemäßer Verwendung bzw. Fehlgebrauch besteht die Gefahr eines elektrischen Schlags.

Das Symbol der durchgestrichenen Mülltonne auf dem Etikett des Produkts weist auf die Konformität dieses Produkts zu den Vorschriften für Elektro- und Elektronik-Altgeräte hin. Das Ablagern in der Umwelt oder die illegale Entsorgung des Produkts ist strafbar.

Safety Warning. Installation, commissioning and periodical maintenance of the product must be carried out by qualified operators in compliance with national regulations and/or local standards. A qualified installer must take all required measures, including use of Individual Protection Devices, for his and others' safety. An improper installation may damage people, animals or objects towards which Giacomini S.p.A. may not be held liable.

Package Disposal. Carton boxes: paper recycling. Plastic bags and bubble wrap: plastic recycling.

Additional information. For more information, go to giacomini.com or contact our technical assistance service. This document provides only general indications. Giacomini S.p.A. may change at any time, without notice and for technical or commercial reasons, the items included herewith. The information included in this technical sheet do not exempt the user from strictly complying with the rules and good practice standards in force.

Product Disposal. Do not dispose of product as municipal waste at the end of its life cycle. Dispose of product at a special recycling platform managed by local authorities or at retailers providing this type of service.

GIACOMINI
WATER E-MOTION

Giacomini S.p.A.
Via per Alzo 39, 28017 San Maurizio d'Opaglio (NO) Italia
consulenza.prodotti@giacomini.com
+39 0322 923372 - giacomini.com